EWIKON

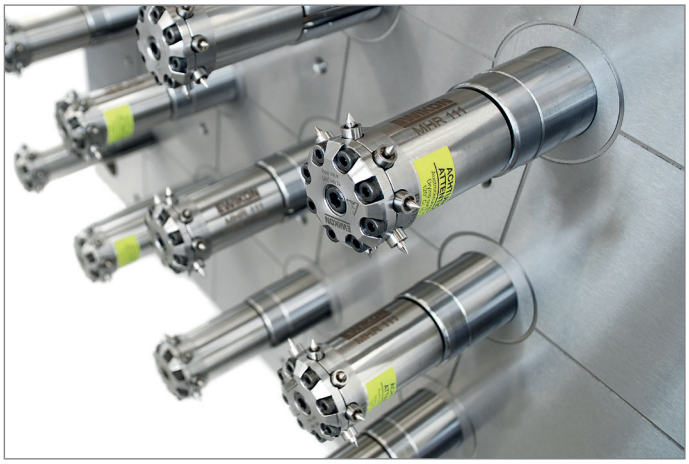

HPS III hot runner systems for side gating

Operating manual

Valid for:

- HPS III adapter nozzles
- HPS III-MHL100/200 nozzles
- HPS III-MHR100/200 nozzles
- HPS III-MHR111 nozzles
- HPS III-MHR112 nozzles
- HPS III-MHR122 nozzles
- HPS III-MH1 nozzles
- HPS III-T/TE manifolds
- Complete hot halves

Item number: 22065
Version: 2.0

EWIKON

1. General remarks ... 7
1.1 Information on this operating manual ... 7
1.2 Manufacturer ... 7
1.3 Formal information on the operating manual ... 7
1.4 Conventions ... 8
1.4.1 Instructions and system responses ... 8
1.4.2 Enumerations ... 8
1.4.3 Abbreviations ... 8
2. Safety instructions ... 9
2.1 Safety instructions and symbols used ... 9
2.1.1 Signal words for hazard classification ... 10
2.1.2 Explanation of pictograms ... 10
2.2 Intended use ... 11
2.3 Improper use ... 11
2.4 Qualification of staff ... 11
2.4.1 Demands on specialised staff ... 11
2.5 Personal Protective Equipment (PPE) ... 12
2.5.1 Symbols of the personal protective equipment ... 12
2.6 General hazards and safety measures ... 12
2.7 Electrical equipment ... 14
2.8 Spare and wear parts, auxiliary and operating materials ... 14
2.9 Limitation of liability ... 14
2.10 Warranty terms ... 15
2.11 Standards and directives ... 15
3. Technical data ... 16
3.1 Mechanical specifications ... 16
3.1.1 Main dimensions of the HPS III hot runner system ... 16
3.1.2 Operating parameters of the HPS III hot runner system ... 16
3.2 Electrical specifications ... 16
3.2.1 Connections/connector pin assignment ... 16
3.3 Hydraulic / pneumatic specifications (drive units) ... 16
3.4 Operating conditions ... 16
3.4.1 Noise emission ... 16
3.4.2 Cooling agent ... 17
3.5 Type plate ... 17
4. Functional description of the HPS III hot runner system ... 18
5. Installation ... 20
5.1 Transport ... 20
5.1.1 Safety information on transport ... 20
5.1.2 Recommended lifting accessories and slings ... 21
5.1.3 Check the lifting accessories and slings before use ... 21

5.1.4 Attachment points ... 22
5.1.5 Working load limit for lifting accessories and slings ... 22
5.1.6 Removal from transport crate ... 24
5.1.7 Transport and movement during installation ... 24
5.2 General safety instructions ... 26
5.3 Technical Requirements ... 29
5.3.1 Tools and operating materials ... 29
5.3.2 Standard parts ... 32
5.4 Checks before installation ... 33
5.4.1 Notes on mould layout ... 33
5.4.2 Standard dimensions of hot runner systems ... 33
5.4.3 Dimensions to be checked for a hot runner system with HPS III-MHL and HPS III-MHR nozzles ... 34
5.5 Installation of HPS III adapter systems ... 37
5.5.1 Installation of adapter systems with nozzles for standard and front installation ... 37
5.6 Installation of HPS III hot runner systems for direct side gating ... 43
5.6.1 Installation of systems with HPS III-MHL100/200 or HPS III-MHR100/200 nozzles ... 43
5.6.2 Installation of systems with HPS III-MHR111 nozzles ... 53
5.6.3 Installation of systems with HPS III-MHR112 nozzles ... 59
5.6.4 Installation of systems with HPS III-MHR122 nozzles ... 65
5.6.5 Installation of systems with HPS III-MH1 nozzles for side gating with open flow channel ... 71
5.6.6 Installation of a hot half with HPS III-MH nozzles ... 78
5.7 Electrical connection of hot runner systems ... 88
5.7.1 Safety instructions ... 88
5.7.2 General information ... 90
5.7.3 Wiring of 1-drop hot runner systems ... 94
5.7.4 Wiring of 2-drop hot runner systems ... 95
5.7.5 Wiring of 4-drop hot runner systems (manifold with 2 control zones) ... 96
5.7.6 Wiring of 6-drop hot runner systems (manifold with 2 control zones) ... 97
5.7.7 Wiring of 8-drop hot runner systems (manifold with 2 control zones) ... 98
5.7.8 Wiring of 8-drop hot runner systems (manifold with 4 control zones) ... 99
5.8 Checks after installation ... 100
6. Start-up and instructions for operation ... 101
6.1 Safety instructions ... 101
6.2 Requirements for operation ... 103
6.3 Start-up and operation of hot runner systems with HPS III-MH nozzles ... 104
6.3.1 First-time start-up and filling of a hot runner system with HPS III-MH nozzles with heat conductive tips ... 104
6.3.2 Start-up of already filled hot runner systems with HPS III-MH nozzles with heat conductive tips ... 104
6.3.3 First-time start-up and filling of a hot runner system with HPS III-MH valve gate nozzles ... 105
6.3.4 Start-up of already filled hot runner systems with HPS III-MH valve gate nozzles ... 106
6.3.5 Colour and material changes ... 106
6.3.6 Shutdown of a system with HPS III-MH nozzles (system / single tip / single cavity) ... 107

6.4 Possible malfunctions 108
6.4.1 Troubleshooting 108
7. Maintenance 109
7.1 Safety instructions 109
7.2 Instructions for maintenance 109
7.3 Maintenance schedule 109
7.4 Deinstallation / installation of tip inserts for HPS III-MH nozzles 110
7.4.1 Safety instructions 110
7.4.2 Deinstallation / installation of tip inserts for HPS III-MH nozzles 111
7.4.3 Deinstallation of tip inserts 112
7.4.4 Cleaning of tip inserts 112
7.4.5 Installation of tip inserts 112
7.5 HPS III-MHL100/200 (valve gate) nozzles – exchange of thermocouple 113
7.6 HPS III-MHR100/200 (valve gate) nozzles – exchange of thermocouple 117
7.7 Instructions for service and repair 122
8. Decommissioning 123
8.1 Safety instructions 123
8.2 Instructions for disposal 124
9. Tightening torques 125
9.1 Tightening torques for socket head screws 125
9.2 Tightening torques for manifold screw connections and retaining screws 127
9.3 Tightening torques for clamping covers of HPS III-MH nozzles 128

1. General remarks

NOTE!

Improper operation of the device may result in severe personal injury and considerable material damage! You must carefully read this operating manual and familiarise yourself with the safety installations before installing, commissioning or maintaining the device. Do not operate the device without having received appropriate training.

1.1 Information on this operating manual

This operating manual has been created in accordance with the directive 2006/42/EC to enable the safe and efficient operation of HPS III hot runner systems (hereinafter called hot runner system).

1.2 Manufacturer

EWIKON Heißkanalsysteme GmbH
Siegener Straße 35
35066 Frankenberg

Phone: +49 6451 501-0
Fax: +49 6451 501-202

E-mail: info@ewikon.com
Web: www.ewikon.com

1.3 Formal information on the operating manual

Person in charge of documentation: Henning Becker

Item number:	not specified
Version:	2.0
Printing date:	21/04/2020
Language:	German (original operating manual)

© Copyright, 2020
All rights reserved. Full or partial reproduction subject to prior written approval by EWIKON Heißkanalsysteme GmbH

1.4 Conventions

1.4.1 Instructions and system responses

Operating steps that have to be carried out by the operator are displayed as a numbered list. The sequence of the steps has to be adhered to.

Example:

1. Operating step 1
2. Operating step 2

1.4.2 Enumerations

Enumerations without mandatory sequence are displayed as a list with bullet points.

Example:

- Point 1
- Point 2

1.4.3 Abbreviations

The following terms and abbreviations are used in the operating manual:

Abbreviation	Meaning
PPE	Personal Protective Equipment
HPS	High Performance Systems
EU	European Union
BR	Installation space
H1	Manifold height
H2	Manifold height + top pressure pad
H3	Manifold height + pressure pad with centering + top pressure pad
H4	Manifold height + top pressure pad + bottom pressure pad
P	Height of nozzle retainer frame plate
B	Height of top pressure pad
KH	Nozzle body height
X	Nozzle length (lower edge of nozzle body to article surface)
ΔS	Gap dimension Delta S
R_A	Sprue bush radius
R_M	Machine nozzle radius
N	Height of hold-down device
HR	Retainer ring height
G	Height from centre axis of tip to end of nozzle
X	X dimension of nozzle
T_{K1} / T_{K2} / T_{K3}	Standard dimensions to determine gap dimension
G	Thread
P	Fit
SW	Width across flats
T	Blueing area

Abbreviation	Meaning
m	Mass
ρ	Density
V	Volume
L x B x H	Length x width x height (e.g. mould plate, hot half)
F	Force
M	Bending moment
T_{HK}	Hot runner temperature (processing temperature)
T_{WZ}	Mould temperature
ΔT	Difference T_{HK} - T_{WZ}

Chart 1: Terms and abbreviations

2. Safety instructions

The HPS III hot runner system conforms to the machinery directive 2006/42/EG and has been designed, manufactured and checked for safety according to the applicable safety rules and legislation and the state of the art.

The HPS III hot runner system is delivered in perfect working order.

The HPS III hot runner system may pose risks, if it is:

- not operated by professionally trained staff.
- used improperly or not used as intended.
- not in perfect order regarding safety.

2.1 Safety instructions and symbols used

Signal words introduce the safety instructions and are marked by symbols. They draw the user's attention to possible hazardous situations that may occur during installation, operation and maintenance. Safety instructions must be followed to prevent accidents, personal injury or material damage.

Warnings

- Protect against possible personal injury and material damage when followed
- Classify the extent of hazard by the signal word
- Indicate the risk of personal injury by hazard signs
- Indicate the type and source of hazard
- Indicate the risk and possible consequences
- Show measures to prevent hazards and prohibit certain behaviours

---

WARNING! = signal word

Source of hazard

Possible consequences, if ignored.

- Measures/prohibitions.

The hazard sign marks warnings which warn against personal injuries.

Source of hazard

The source of hazard indicates the cause of hazard.

Possible consequences, if ignored

If the warnings are ignored, possible consequences are e. g. crushing, burnings or other severe injuries.

Measures/Prohibitions

"Measures/Prohibitions" lists actions that are to be carried out to prevent a hazard (e. g. stop a drive unit) or that are prohibited to prevent a hazard.

2.1.1 Signal words for hazard classification

HAZARD!

indicates an imminently hazardous situation which, if not avoided, will result in death or serious injury.

WARNING!

indicates a potentially hazardous situation which, if not avoided, will result in death or serious injury.

CAUTION!

indicates a potentially hazardous situation which, if not avoided, will result in minor injury or material damage.

NOTE!

indicates useful additional information and tips to promote trouble-free operation and to prevent material damage

2.1.2 Explanation of pictograms

Read
operating manual

Caution!
Risk of electrocution

Caution!
Hot surface

Caution!
Oxidising agents

Caution!
Suspended loads

Caution!
Risk of crushing

Caution!
Explosive atmosphere

Caution!
Hand injuries or cuts

Caution!
Pressurised systems

Caution!
Forklift trucks operating

2.2 Intended use

EWIKON hot runner systems are exclusively designed for the intended use described in this manual.

Any different and unintended use is excluded and may result in personal injuries and material damage.
Warranty expires in this case.

EWIKON hot runner systems and single nozzles are only to be used for injection moulding applications, assembled in an enclosed injection mould.

They are used to process thermoplastic resins according to their individual processing requirements and to pass them gently from the injection unit to the cavity by optimum temperature distribution and flow paths.

In order to use the hot runner system as intended it is essential that all tips and information given in this operating manual are read, understood and followed.

To ensure safe operation of the hot runner system, the given maintenance & inspection schedule has to be adhered to.

The system is designed for an injection pressure of 2000 bar.

The resin used has to be processed according to the guidelines of the material manufacturer.

Use of the HPS III hot runner system

Use the HPS III exclusively for its intended use and in perfect condition as regards safety! This is the only way to guarantee a reliable operation of the HPS III hot runner system.

2.3 Improper use

Any use deviating from the use defined under "Intended use" or that goes beyond that use is considered improper use.

2.4 Qualification of staff

The staff has to prove that it is qualified to perform assembly, maintenance and repair. Any lack of knowledge has to be eliminated by training and briefing the staff.

2.4.1 Demands on specialised staff

Improper use of EWIKON hot runner systems may result in personal injuries or material damage. Only specialised staff is allowed to carry out any work.

Only specialised staff is allowed to install and operate EWIKON hot runner systems. Specialised staff is trained, has proven knowledge and experience in operating e. g. injection moulding units or electrical machines and devices as well as knowledge of the relevant regulations and is able to indepently identify possible hazards and prevent them by taking protective measures.

2.5 Personal Protective Equipment (PPE)

Wear the necessary protective equipment when working on or near the machine. Special information on the personal protective equipment in the work area has to be observed.

2.5.1 Symbols of the personal protective equipment

Always wear the following when carrying out any work:

Protective clothes: To protect your body wear tight-fitting clothes with low resistance to tearing, without protruding parts and with long sleeves and long trousers. Do not wear rings, chains or any other jewelry.

Safety shoes: To protect yourself against electric shocks, melt splashes, heavy, falling objects and slips and falls on slippery surfaces.

Always wear the following when carrying out special work:

Safety glasses: To protect your eyes against scattering debris, heat and melt splashes.

Face mask: To protect your face against scattering debris, heat and melt splashes.

Protective gloves (heat resistant): To protect your hands against extreme heat, abrasions, punctures and more severe injuries.

Ear protection: To protect your ears against loud ambient noise.

Protective helmet: To protect your head against falling objects and sharp edges.

Heat resistant apron: To protect your body against extreme heat.

2.6 General hazards and safety measures

The company operating the system must comply with the statutory obligations on occupational safety. In addition to the safety instructions of this manual the safety, accident prevention and environment protection provisions applicable for the system's range of use must be adhered to. The operating company must clearly define responsibilites and make sure that all staff operating the system has read and understood this manual. The company also has to inform about hazards at regular intervals. Personal protective equipment has to be made available to the staff. Maintenance intervals have to be respected.

Risk of physical injuries by high pressure or unexpected material leakage

- Unexpected material leakage may result in burns. There is a risk of serious injuries or death and/or damage to the hot runner.
- There is also a risk of burns, if water gets onto or into the hot runner. If the water reaches dangerously high temperatures, the metal housing may burst and cause serious injuries due to emerging water vapour or melting resins.

Safety measures

- Make sure the hot runner system heats up evenly. Particularly for large manifolds it may be necessary to switch on nozzle and sprue bush heaters simultaneously, but later than the manifold heaters.
- Make sure the nozzle tips and/or the gates are not blocked by solidified resin that has a higher melting pont and that there is no humidity on the hot runner system, e.g. caused by a leaky temperature control circuit (please see chapter „6.3 Start-up of a HPS III hot runner system“).

Risk of burns

- Hot surfaces
  Many components of the hot runner systems get very hot and may cause severe skin burns when being touched.
- Hot material (plastic melt)
  Never touch material leaking from the nozzle/the mould/the hot runner or the material inlet. Even material that seems to be cooled down already may still be hot inside the core and cause burns.

Safety measures

- Please make sure you wear your personal protective equipment (PPE) when working near or on a hot runner system. Pay special attention to warnings indicating hot surfaces. All components have to be cooled down to ambient temperature before you start working. Exceptions to these rules are explicitly mentioned.

Risk of electric shocks

- Danger to life by electric shock.
  Touching live surfaces may result in severe or even lethal injuries.
- Always keep water away from live components and the hot runner. There is a risk of short circuits!

Safety measures

- Electrical systems have to be disconnected from the mains and secured against being switched on again before any work is carried out. Only authorised electricians are allowed to carry out any work on electrical systems.
- All components have to be connected to a suitable power source according to the wiring diagrams and under consideration of the applicable local regulations. Injection moulding machine and hot runner systems have to be grounded.

Risk of physical injuries by suspended/heavy loads

- Only trained staff is authorised to operate lifting devices and forklift trucks. Proceed slowly and with care. Prevent the uncontrolled swinging of the loads (e. g. the manifold).

Safety measures

- Lifting devices and forklift trucks have to be designed to bear the weight and the size of the hot runner system/manifold. Make sure to use the marked lifting points.

Risk of physical injuries by pressurised connecting lines (e.g. air, hydraulics, water)

- All supply lines for the medium supply of the hot runner and/or the hot runner system or the hot half have to be long enough to prevent any stress when the mould halves part. They must not be affected by moving parts of the mould or of the machine. Prevent the hoses from rubbing over the edges of the mould as they may be damaged because this might cause a spontaneous leakage of pressurised process media (pressurised air, hydraulic oil, water).

Safety measures

- Make sure you have depressurised all supply lines before carrying out any work.
  Only skilled personnel is allowed to carry out work on the supply lines. Please wear your personal protective equipment (PPE).

Risk of physical injuries by sharp edges and corners

- Sharp edges and corners pose a risk of injury, possibly resulting in skin abrasions and cut injuries.

Safety measures

- Make sure you wear protective gloves when working near sharp edges and corners.
  Proceed with care.
- Make sure the system is clean and free of burrs.

Risk of physical injuries by crushing of extremities

- There is a risk of injury when lifting heavy loads during assembly operations, possibly resulting in crushing of hand or other parts of the body.

Safety measures

- Wear protective gloves to prevent injuries while working around heavy loads.
- Make sure all body parts are kept away from the hazardous area while setting down heavy loads.

2.7 Electrical equipment

HAZARD!

Residual voltage after activation

Risk of death by electric shock and severe injuries caused by live components.

- Check for zero potential before performing any work!

Any work on electrical equipment must be carried out by qualified electricians. Always apply the 5 safety rules when working with electrical components:

- Disconnect from the mains
- Secure against reconnection (by activating the repair switch and installing a safety lock at the same time, if necessary)
- Verify that the installation is dead
- Carry out grounding and short circuiting
- Provide protection against adjacent live parts

Maintenance work must be carried out by qualified and trained staff or maintenance staff. Never use the HPS III hot runner system with faulty or inoperable electrical connections. In case of energy supply disruptions immediately switch off the HPS III hot runner system. The maintenance & inspection schedules regarding electrical components given by the manufacturers have to be adhered to. Check for damaged insulation at regular intervals.

2.8 Spare and wear parts, auxiliary and operating materials

The use of non-OEM spare and wear parts as well as auxiliary material may pose risks. Only use original parts or parts approved by EWIKON Heißkanalsysteme GmbH. Only use auxiliary and operating materials which are suitable for their intended use (compare chapter „5.3 Technical Requirements“).

2.9 Limitation of liability

All information and instructions given in this manual have been compiled in consideration of the applicable standards and regulations, state of the art as well as our know-how and experience.

EWIKON does not assume liability for any damage caused by:

- Non-observance of this manual
- Improper use
- Use of unskilled staff
- Unauthorised retrofitting or technical modifications
- Use of non-approved spare parts as well as inappropriate auxiliary and operating materials

The technical service provided verbally, in writing or on the basis of tests represents our best knowledge but is not binding and does not release you from carrying out additional tests on the products supplied by us regarding their suitability for the intended use.

The use of the products is beyond our control. Therefore, it is your own responsibility to ensure that the products meet your specific requirements. Nevertheless, should an issue of liability arise, all damage shall be limited to the value of the products supplied by EWIKON and used by you.

We guarantee the perfect quality of our products in accordance with our general terms and conditions of sale and payment as well as the extended warranty conditions.

These are available on our homepage **www.ewikon.com**.

The statutory provisions prevailing at the time of conclusion of the contract shall apply.

We reserve the right of technical alterations to develop our products and enhance their performance properties.

2.10 Warranty terms

For warranty conditions of cold and hot runner systems and components please refer to the terms and conditions of EWIKON.

2.11 Standards and directives

EWIKON hot runner systems conform to the following European directives:

- Machinery Directive 2006/42/EC
- Low Voltage Directive 2014/35/EU
- EN ISO 12100:2010 Safety of machinery -
  General principles for design - Risk assessment and risk reduction
- EN 60204-1:2007-06 Safety of machinery -
  Electrical equipment of machines - Part 1: General requirements

3. Technical data

3.1 Mechanical specifications

3.1.1 Main dimensions of the HPS III hot runner system

Description	Quantity/size (approx.)	Unit
Dimensions	See catalogue / PO-related documents	mm
Weight	See catalogue / PO-related documents	kg

Chart 2: Main dimensions of the HPS III hot runner system

3.1.2 Operating parameters of the HPS III hot runner system

Description	Quantity/size (approx.)	Unit
Maximum injection pressure	2000	bar
Maximum operating temperature	Depending on order	°C

Chart 3: Operating parameters of the HPS III hot runner system

3.2 Electrical specifications

3.2.1 Connections/connector pin assignment

Description	Quantity/size (approx.)	Unit
Voltage	230	V
Frequency	50	Hz

Chart 4: Electrical data (only valid within the EU)

3.3 Hydraulic / pneumatic specifications (drive units)

Description	Quantity/size (approx.)	Unit
Maximum hydraulic pressure (normal operation: 30 bar)	50	bar
Maximum pneumatic pressure (normal operation: 8 bar)	10	bar

Chart 5: Hydraulic / pneumatic data

3.4 Operating conditions

Operating conditions	Size (approx.)	Unit
Ambient temperature (maximum value)	40	°C
Ambient temperature (minimum value)	10	°C
Relative humidity during operation (no condensation!)	20 to 80	%

Chart 6: Operating conditions

3.4.1 Noise emission

Determining the sound power level of noise sources based on noise pressure measurements acc. to DIN EN ISO 3741

Operating conditions	Size (approx.)	Unit
Distance to device	*	mm
Noise pressure level (operation)	*	dB (A)

Chart 7: Noise emission

* Values can be determined only after the entire system has been started up.

3.4.2 Cooling agent

The use of unsuitable cooling agents may result in deposits and corrosion in the component to be cooled. This will negatively affect the functionality of the hot runner system. Components of the hot runner system may be damaged by a reduced cooling performance in the worst case. Cooling agents (water) have to satisfy the following minimum requirements:

- Cooling by tap water is not recommended since hard water can cause deposits and corrosion.
- The water has to be clear, colourless and odourless.
- It has to be free from any floating or suspended matters.
- A warranty on the resistance of components to be cooled against corrosion attacks cannot be given. However, the use of suitable cooling agents can considerably enhance this resistance.

3.5 Type plate

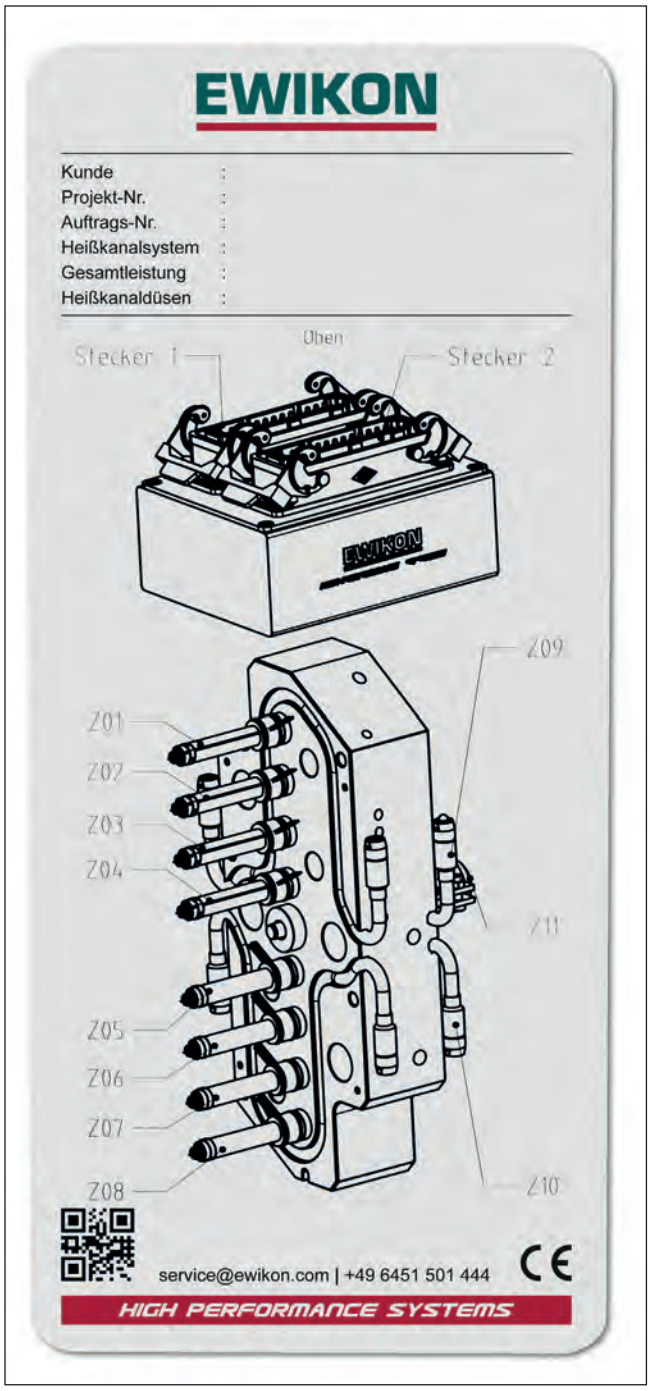

Picture 1: Type plate

CAUTION!

Respect operating temperatures

Each hot runner system is individually designed for the material to be processed. Therefore, the specified operating temperatures must be observed. The temperature difference ΔT between hot runner temperature T_{HK} (processing temperature) and mould temperature T_{WZ}, must be strictly adhered to.

- Non-observance may cause an escape of melt inside the mould (ΔT too low) or damage to components (ΔT too large).

The system type plate is to be displayed prominently on the operator side of the mould. Hot halves are delivered with the type plate already mounted.

The type plate indicates project number, order number, type of hot runner system, overall performance, drive unit type, nozzles used and, if necessary, other important specifications.

For the exact allocation of heater zones and contact pins in the plugs please refer to the wiring scheme in the order specific documents.

4. Functional description of the HPS III hot runner system

The schematic diagrams of the components of a HPS III hot runner system and the installation space shown in this document should not be regarded as the only valid general layout but only present one of many possible assembly configurations.

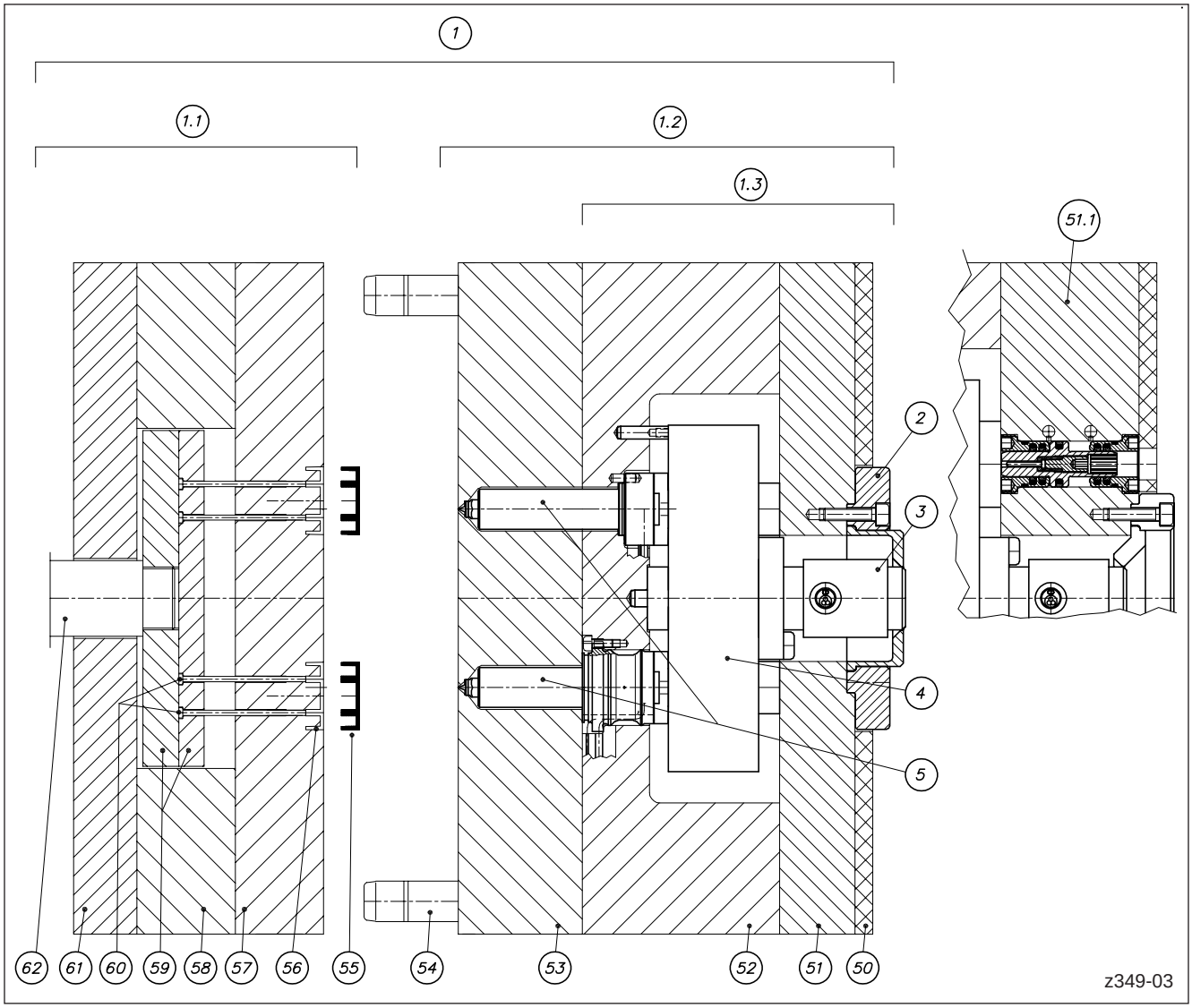

Picture 2: Layout of an injection mould with HPS III hot runner system for the processing of thermoplastic resins

Pos. 1 Injection mould with hot runner system

Pos. 1.1 Moving mould half (ejector side)

Pos. 1.2 Fixed mould half (nozzle side)

Pos. 1.3 Hot half (nozzle side without contour plate)

Pos. 2 Locating ring

Pos. 3 Sprue bush

Pos. 4 Hot runner manifold

Pos. 5 Hot runner nozzles

Pos. 50 Insulating plate (optional)

Pos. 51 Clamping plate

Pos. 51.1 Clamping plate
with drive unit for valve gate nozzles

Pos. 52 Nozzle retainer frame plate

Pos. 53 Contour plate

Pos. 54 Guide bolts

Pos. 55 Moulded part

Pos. 56 Cavity

Pos. 57 Contour plate

Pos. 58 Riser

Pos. 59 Ejector plates

Pos. 60 Ejector pins

Pos. 61 Clamping plate

Pos. 62 Ejector bolts

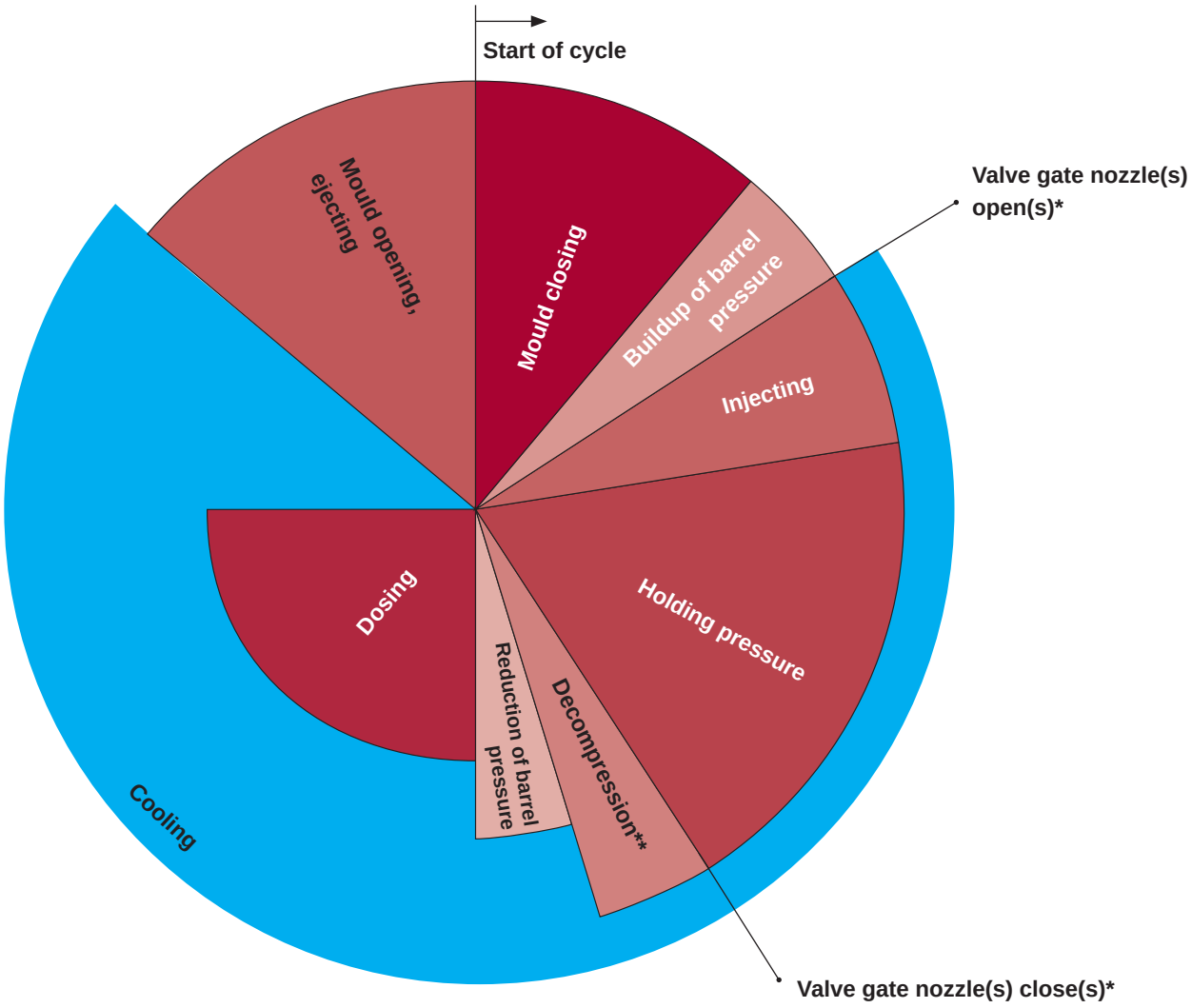

Picture 3: Injection moulding cycle

* for valve gate systems
** recommended for open systems

A hot runner system is used to distribute plastic melt between the injection moulding unit of an injection moulding machine and the cavities of an injection mould (compare picture 2). The plastic material remains permanently molten until it enters the cavities.

The plastic melt made available by the injection moulding unit is guided through the sprue bush to the manifold during the injection moulding cycle. In the manifold the melt stream for the individual cavities is split and fed to the hot runner nozzles. The hot runner nozzles guide the melt stream to the cooled cavities (compare picture 3).

If a valve gate system is used, the valve pins are opened when injection starts. While the moulded parts continue to cool down a holding pressure phase to compensate shrinkage follows after the injection phase with a continued, usually pressure-regulated melt transport into the cavity (compare picture 3). After the moulded part has solidified to such an extent that no new material can enter the cavity, the holding pressure phase has finished and the moulded parts cool down until they reach a safe demoulding temperature.

If a valve gate system is used the opening towards the cavity (gate) will be closed again by a movement of the valve pins after the holding pressure phase has been finished (compare picture 3). If open systems are used, a decompression phase will follow to prevent plastic melt from leaking from the gate area. While the moulded parts continue to cool down in the cavity the injection moulding machine can prepare the melt for the next cycle. After the demoulding temperature has been reached, the injection mould opens and the solidified parts are ejected.

5. Installation

The following information is intended to help you install the HPS III hot runner system. In addtion, the assembly staff has to have the know-how required to install an HPS III hot runner system.

The described installation processes are examples for standard nozzles and standard systems.
Special systems may require different procedures! Please observe the instructions in the order specific documents.

5.1 Transport

This chapter describes how to transport a hot runner system without damaging it and how to ensure occupational safety for the staff.

5.1.1 Safety information on transport

WARNING!

PPE

Suspended loads

Death and severe crushing of body or extremities.

- Keep clear of and do not pass under suspended loads.
- Keep clear of suspended loads while they are being transported.
- Do not touch lifting devices and lifting accessories while lifting the load.
- Only lift, transport and set down loads, if you have received appropriate training.
- Only use suitable and undamaged lifting devices and lifting accessories which are checked regularly.
- Do not exceed the maximum load limit of lifting accessories.

Sharp edges and heavy components

- Cut injuries to body and extremities, mainly to the hands.
- Crushing of fingers or hand.

NOTE!

Inappropriate transport

Damage to the HPS III hot runner system.

- Only specially trained staff is authorised to transport the HPS III hot runner system.
- Only use designated attachment points to attach lifting devices.
- Exercise greatest caution when transporting the HPS III hot runner system. Handle with care.

Pendular motion while lifting the hot runner systems with a lifting device (e.g. overhead crane)

Damage to the HPS III hot runner system and/or injection mould.

- Avoid pendular motions! Move HPS III hot runner system slowly and with care.
- When using the lifting device to connect heavy components avoid tilting while lifting and lowering.

5.1.2 Recommended lifting accessories and slings

The lifting accessories and slings have to conform to the machinery directive 2006/42/EC (i.a. the general principles section, chapter 4.1.2.5 "Lifting accessories and their components"). Forged steel components have to be checked according to DIN EN 1677-1 "Components for slings – Safety – Part 1: Forged steel components, Grade 8".
Please also see chapter „5.3.1 Tools and operating materials“.

Slings

- Attachment swivel (min. grade 8), swivelling 360° with self-aligning rotatable eye (180°).
  Most current sizes used at EWIKON: M8, M10, M12 and M16. See Picture 4.

Lifting accessories which are required or admitted only for certain installation work:

- Lifting beam (for specifications please see suppliers of lifting beams). See PPicture 5.
- Spacer bolt for attachment swivel (allowed for L2X systems only, can only be purchased from EWIKON).
  The spacer bolts must not be used for other transport processes! See PPicture 6. They should only be used when attachment swivels can not be used for lack of space.

Lifting accessories (to be used only with attachment swivels)

- Assembled chain slings according to DIN EN 1677 „Components for slings - Safety - Part 1: Forged steel components, Grade 8“ (with metal tag acc. to DIN 685). The octagonal red metal tags should show information about load capacities for usual modes of assembly (see PPicture 7).
- Webbing slings (see PPicture 8) and round slings (see PPicture 9) with sewn in label indicating the working load limit for common modes of assembly (for specifications see suppliers of webbing slings and round slings).

Overview of lifting accessories and slings:

Picture 4:
Attachment swivel

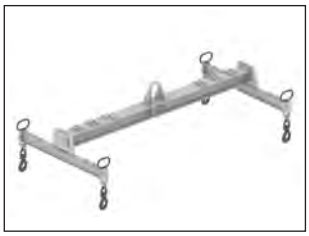

Picture 5:
Lifting beam

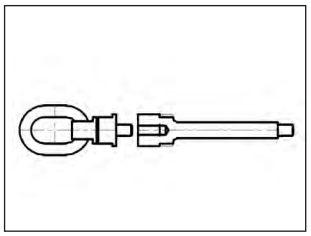

Picture 6: Spacer bolt for attachment swivel

Picture 7:
Assembled chain sling

Picture 8:
Webbing sling

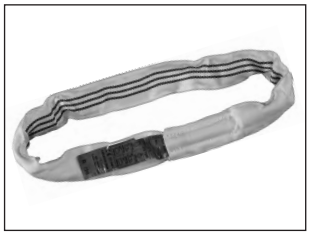

Picture 9:
Round sling

5.1.3 Check the lifting accessories and slings before use

- Lifting accessories and slings have to be checked regularly at intervals not exceeding 12 months by a qualified person. Inspection tags showing the expiration date of the current period of use should be attached directly to the lifting accessories and slings.
- A visual inspection of the lifting accessories and slings for damage has to be carried out before each use. As soon as the replacement state of wear, i.e. a defined wear characteristic, has been reached, the lifting accessories or slings must not be used any longer.
- Chains must not show any mechanical damage such as crushing, dents, deformations, expansions or cracks.
- Webbing slings must not show any yarn breaks, yarn cuts, damage to load bearing seams and deformations caused by heat or must not be subject to aggressive substances (acids, alcalis/bases, solvents).

5.1.4 Attachment points

Attachment points can be placed on the upside or on the side surfaces of the hot runner system or the hot runner component. Other possible attachment point positions are:

- Hot half (see Picture 10):
  Upside (position A): used when removing the goods from the transport crate or on transport
  Side surface (postions B and C): used on transport and installation
- Manifold (see Picture 11):
  Upside (position A): when removing the goods from the transport crate or on installation
  Side surface (position B): used when turning the manifold around
- L2X-System (see Picture 12):
  Upside (position A): used when removing the goods from the transport crate oder on transport
  Downside (position D): used on installation

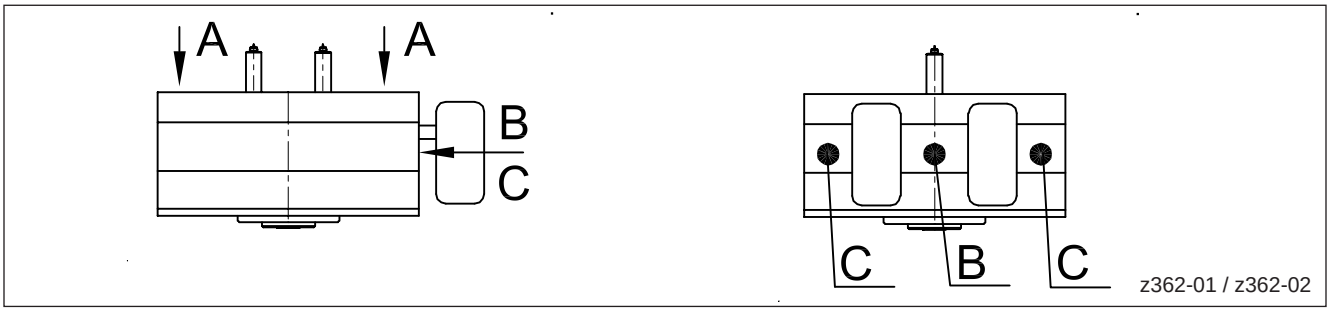

Picture 10: Possible attachment points to a hot half

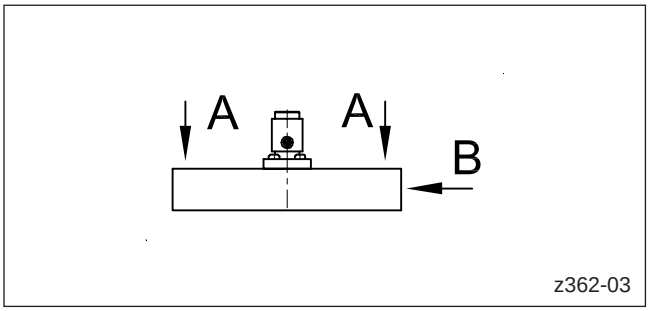

Picture 11: Possible attachment points to a manifold

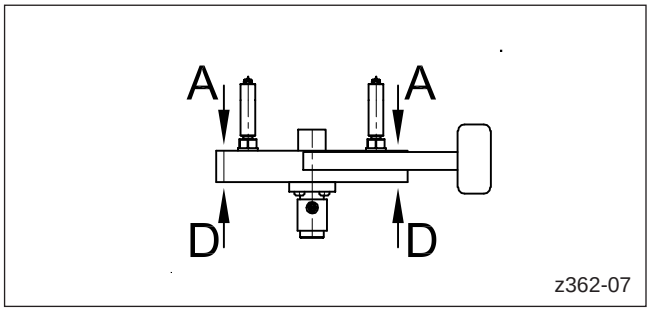

Picture 12: Possible attachment points to an L2X system

5.1.5 Working load limit for lifting accessories and slings

Before transport the working load limit for the used lifting accessories and slings must be checked in the following order:

1. How heavy is the load?

- The weight of single components, systems or hot halves is indicated on the EWIKON note of delivery (net weight, without packaging).
- If this information is not available anymore the weight can be estimated. However, there should be a sufficient margin up to the load limit of the lifting accessories and slings. The mass can be determined using the formula m = ρ * V. Use the density of steel (ρ = 7,85 g/cm^3) for your calculation. The calculated result automatically includes a sufficient safety margin because possibly existing hollow spaces or areas made of lighter materials are calculated using the density of steel. Calculate the volume of a hot half or a nozzle side with V = L x B x H [cm^3]. Possibly protruding areas (nozzles, wiring box) do not have to be taken into consideration. The volume of a manifold (without nozzles) or an L2X system (nozzles have already been screwed to the manifold) can be approached using the largest external dimensions of the manifold (L = largest linear expansion, B = largest width expansion, H = thickness of manifold).

2. Identify attachment points

- Where are the attachment points positioned (transport threads)?
- How many attachment points are available for specific transport situations?
- What are the thread sizes of the transport threads?

3. Is one single attachment point sufficient to lift the load vertically stretched or is more than one attachment point necessary to lift the load?

- Only for the transport of hot halves, nozzle sides or individual mould plates usually one single attachment point is sufficient (see Picture 13) as the gravity centre usually coincides with the attachment point! In this case the lifting capacity is 100 %. (see Chart 8)
- At least 2 attachment points are necessary to lift manifolds or L2X systems as otherwise it will not be possible to lift the load in a directed way. This is often absolutely necessary when carrying out installation work. When 2 attachment points are used to lift loads the following situations have to be distinguished:
  - The load is distributed between two evenly stressed but sloping legs (see Picture 14). The maximum load has to be reduced corresponding to the angle of inclination α (see Chart 8)
  - The load is distributed between two evenly stressed but vertically stretched legs (angle of inclination α = 0°) (see Picture 15). To apply force correctly the use of a lifting beam is absolutely necessary.
  - If the centre of gravity is asymmetric loads should be lifted using more than 2 attachment points. It can be helpful to use a lifting beam.
  - If spacer bolts for attachment swivels are used it is absolutely necessary to use a lifting beam to enable a correct application of force via vertically stretched legs (see Picture 16).
    If the load is lifted using sloping legs, a force F will be generated causing a side load M in the screw-in thread. Breakage risk arises (see Picture 17).

4. Are the lifting accessories and slings approved for the respective modes of assembly?

- Is the allowed maximum weight respected?
- Is the load capacity reduced due to the specific lifting arrangement?

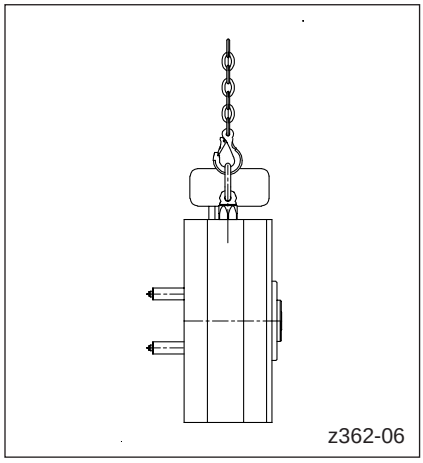

Picture 13: Lifting a load using one single attachment point
(example: hot half in vertical position)

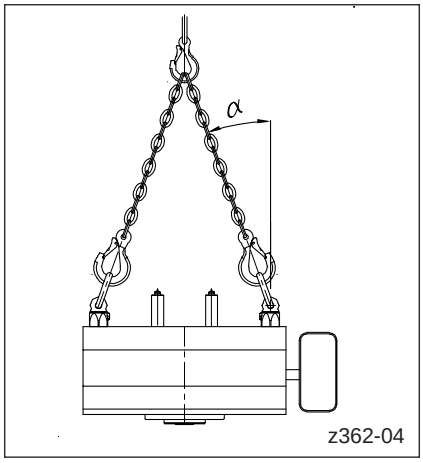

Picture 14: Lifting a load using 2 attachment points, distributed between two evenly stressed but sloping legs
(example: hot half in horizontal position)

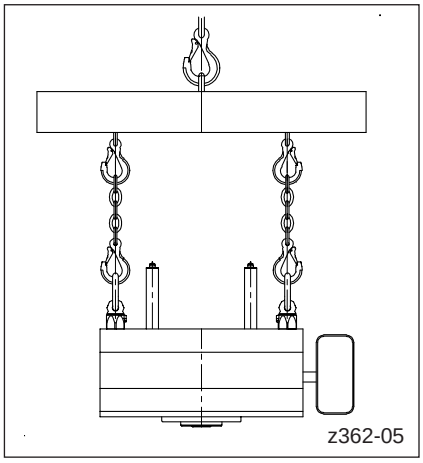

Picture 15: Lifting a load using 2 attachment points, distributed between two evenly stressed but vertically stretched legs
(example: hot half in horizontal position)

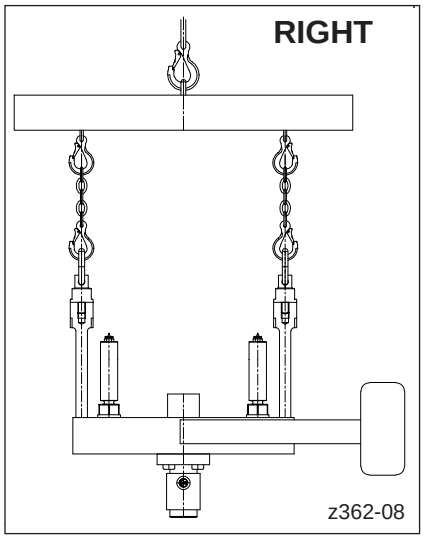

Picture 16: How to lift a load correctly using spacer bolts for attachment swivels
(L2X system)

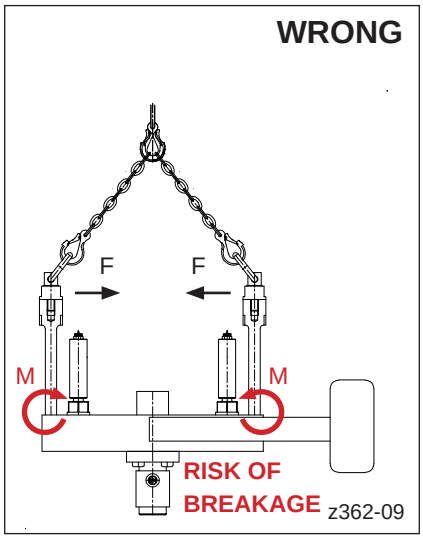

Picture 17: How to lift a load incorrectly using spacer bolts for attachment swivels
(L2X system)

Angle of inclination	Load capacity of each leg of a 2-leg chain sling	Load capacity of the 2-leg chain sling
0 °	100 %	2 x 100 %
up to 45 °	70 %	2 x 70 %
45 ° up to 60 °	50 %	2 x 50 %
above 60 °	Use not permitted	

Chart 8: Assessment of stress of slings (source: BGI 556, for detailed information see above)

5.1.6 Removal from transport crate

How to remove a hot half, an L2X system or a manifold from a transport crate or a pallet (see Picture 14, Picture 15 and Picture 16).

- Open transport crate with suitable tools.
- Remove packaging material.
- Check hot half, L2X system or manifold for damage.
- Screw in attachment swivels and affix them to a crane (most products can be lifted out of the transport crate without having to remove the walls of the crate).
- Carefully lift hot half, L2X system or manifold vertically upwards and place it on a safe and non-slip surface (if system can be placed without damage) or on a safe substructure (e.g. for L2X system).

5.1.7 Transport and movement during installation

NOTE!

Consider reduced load capacity of attachment swivels!

For the installation work described below the attachment swivels are loaded at changing inclination angles. Depending on the manufacturer and design of the attachment swivel the maximum possible load capacity must no longer be utilized. If the attachment swivels recommended by EWIKON are used for such installation work (see chapter „5.1.2 Recommended lifting accessories and slings“), the maximum load capacity of an attachment swivel should always be reduced by at least the half.

Using wooden laths to move hot runner assemblies

- The surface to be used must be safe and non-slip.
- Height H of the wooden lath must only be high enough to enable a tilting of the hot runner assembly. Additionally, height H must be considerably smaller than width B (H<<B) to prevent the hot runner assembly from slipping (see Picture 18).
- The contact surface L x B of the wooden lath must be large enough to prevent the hot runner assembly from slipping away while it is being moved. (see Picture 18).
- If possible the wooden lath should cover the whole length L of the hot runner assembly (see Picture 19).

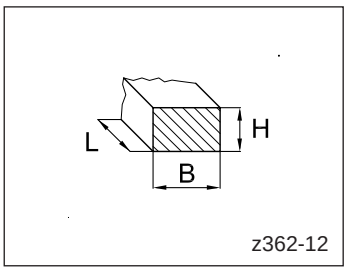

Picture 18: Dimensions of a wooden lath

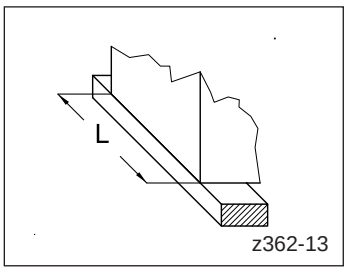

Picture 19: Positioning a hot runner assembly on a wooden lath

Putting hot runner assemblies (hot halves, mould plates, manifolds or L2X systems) from lying (horizontal) into upright (vertical) position.

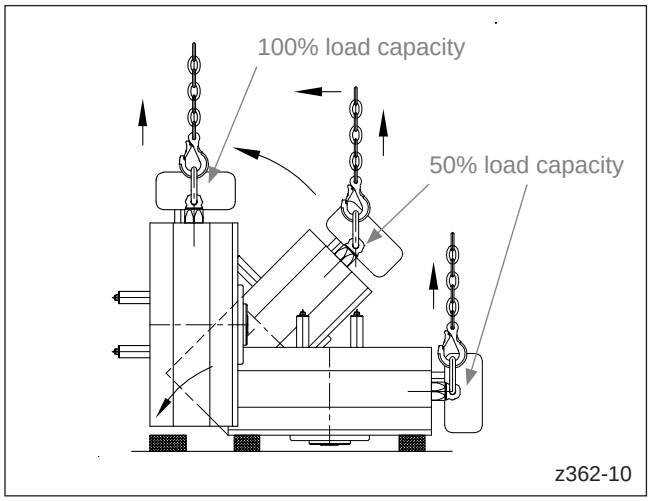

Picture 20: Putting hot runner assemblies (hot halves or mould plates or manifolds) from lying (horizontal) into upright (vertical) position

1. The hot runner assembly must be placed on an even, non-slip surface.
2. Screw in attachment swivels and affix them to a crane.
3. Put a wooden lath on the working surface and secure against slipping. It has to be positioned in such a way that when the external lateral surface of the hot runner assembly is erected it can be supported by the wooden lath.
4. Slowly lift the hot runner assembly until the lateral surface touches the wooden lath. Continue lifting the assembly until it reaches upright position following the movement of the hot runner assembly with the crane so that the crane hook is always perpendicular to the attachment point .
5. When the hot runner assembly hangs freely in upright position, remove the wooden lath and carefully place the hot runner assembly on a surface or move it using a crane.

Putting hot runner assemblies (hot halves, mould plates, manifolds or L2X systems) from upright (vertical) into lying (horizontal) position.

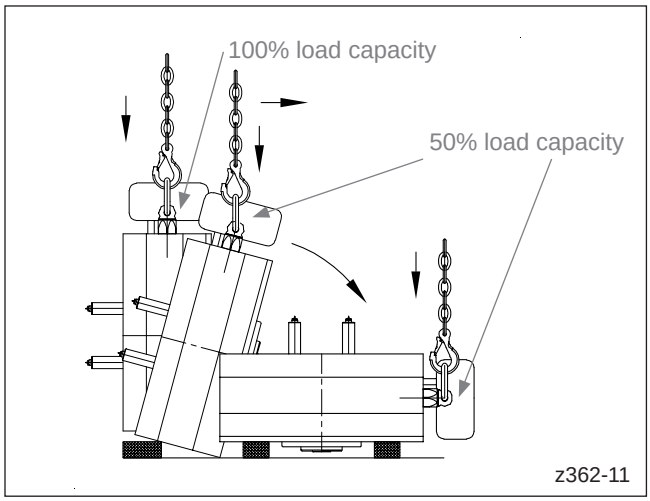

Picture 21: Putting hot runner assemblies (hot halves, mould plates or manifolds) from upright (vertical) into lying (horizontal) position.

1. Put a wooden lath on the working surface and secure against slipping. it has to be positioned in such a way that the external lateral surface of the hot runner assembly can rest on the wooden lath when it is dropped.
2. Use the crane to position the freely hanging hot runner assembly over the wooden lath
3. Slowly drop the hot runner assembly until the external lateral surface touches the wooden lath. Continue dropping the hot runner assembly carefully until it tilts and touches the working surface. Follow the tilting movement of the hot runner assembly with the crane so that the crane hook is always perpendicular to the attachment point.
4. Carefully put the hot runner assembly on the working surface following the movement of the hot runner assembly with the crane so that the crane hook is always perpendicular to the attachment point. Make sure there is a solid substructure so that protruding components are not damaged.

NOTE!

Pay attention to system characteristics

The work steps described just show how to move the system most commonly. Depending on the system layout further measures which have to be determined individually may be necessary to move and assemble hot runner assemblies in a safe way. The chapters „5.1.2 Recommended lifting accessories and slings“ and „5.1.5 Working load limit for lifting accessories and slings“ must be paid attention to.

- Particularly for L2X drop-in systems many system versions are possible. When any transport or assembly work is carried out it has to be ensured that protruding components (e.g. nozzles, heater outlets or wiring) as well as components with reduced stability (e.g. wiring channels, connection boxes or connection blocks for supply lines) are not damaged. It may be necessary to use additional lifting accessories and slings as well as specific substructures to support the hot runner assembly.
- A second crane may be necessary to turn the hot runner system completely to avoid accidents and damage to components.

5.2 General safety instructions

DANGER!

Installation with activated voltage supply

Risk of death by electric shock and severe injuries caused by live components.

- HPS III hot runner system, single tip nozzle, hot half and injection mould must be disconnected from the voltage source during installation.

WARNING!

PPE

Sharp edges and heavy components

- Cut injuries to body and extremities, mainly to the hands.
- Crushing of fingers or hand.

Hot surfaces

Body burns by hot surfaces.

Check of live components before installation

The electrical equipment of the hot runner system should be checked, especially those areas which will no longer be accessible after installation. Physical injuries such as an electric shock can be prevented that way.

Please check

- if cables are kinked or squeezed
- if cable insulations are undamaged.

Pressurized systems

All hydraulic or pneumatic supply lines must be depressurised during installation.

- Injuries caused by flying parts or "whipping" hoses.
- Injuries to eyes caused by escaping pressurised liquids.

CAUTION!

Control of the given tolerances while checking important dimensions

All given tolerances must be checked before initial installation. Failure to do so may result in leakage during operation, damage to nozzles and other components of the mould and severe injuries to persons such as burns caused by leaking plastic melt.

Machining the tip sealing area in the contour plate

The tip sealing areas should be ground or milled to fit but not eroded; otherwise leakage may be possible during operation.

Cleanliness of sealing surfaces

Prevent sealing surfaces from being damaged by dirt or unsuitable cleaning tools. Failure to do so may result in leakage during operation or damage to the sealing surfaces during installation.

NOTE!

Intended use

Damage to the HPS III hot runner system and/or components of the surrounding injection mould.

- The HPS III hot runner system must only be installed in a matching injection mould.

Recommended auxiliary materials (tools) and operating materials for the following installation steps

The use of non-approved assembly tools may result in damage to the hot runner system (for recommended auxiliary and operating materials please see chapter „5.3 Technical Requirements“).

Ambient conditions during installation

Make sure that the hot runner components are protected from direct humidity during assembly.

Dimensional check (for details please also see chapter „5.4 Checks before installation“)

Check of the given installation dimensions, fit sizes, form and location tolerances of the mould plates surrounding the hot runner system (for information please see the current catalogues in the download section on www.ewikon.com). The following dimensions have to be checked in particular:

- Mould plate dimensions.
- Height dimensions (e.g. X dimension).
- Fit sizes (e.g. in the tip sealing area).
- Gap dimensions.

Cleaning

- Clean the installation space.
- Make sure the sealing surfaces (contour plate/tip insert, nozzle/manifold) are clean. If necessary clean sealing surfaces with suitable cleaning tools (brass brush or brass scraper). Prevent sealing surfaces from being damaged by dirt or unsuitable cleaning tools. You have to heat up the HPS III-MH nozzles (processing temperatures) before cleaning them. Failure to do so may result in leakage during operation or damage to the sealing surfaces during installation.

Pay attention to temperatures during installation

The HPS III hot runner system has to be installed when it is cold (room temperature) (exception: L2X systems). Excessive temperatures during installation may result in damage to the melt sealing area and thus leakage during operation.

Mechanical stress of cable ends

The cable ends must not be subject to tensile stress.

Protect the cable ends

When wiring the system make sure that the thermo and power lines do not protrude from the outer edges of the mould and are protected against damage. The distances between hot runner and cables inside the mould have to be dimensioned in such a way that there is no damage to the components caused by excessive heat.

Secure the connection cables

All connecting cables have to secured in such a way that they do not get pinched when they are installed in the mould (use cable binders and/or covering plates for the recesses).

Adhere to bending radiuses of the coil heater and the thermocouple when doing the wiring. The minimum bending radius is 15 mm. The connection can only be bent once.

Threads of screws and nozzle tips and threaded holes

Make sure all threads are clean and free moving, otherwise screws do not achieve the requested preload when tightened with the given torques. Screw connections may separate due to insufficient preload, possibly resulting in leakage during operation. When screwing in nozzle tips gaps between sealing surfaces may be possible - this may also lead to leakage during operation.

Unless otherwise indicated only use high-temperature lubricant (see chapter „5.3.1 Tools and operating materials“) to tighten threads in order to ensure the screws can be demounted any time.

Tightening torques

Wrongly chosen torques may lead to an excessive or insufficient preload of screws possibly resulting in leakage during operation due to separated screw connections (insufficient tightening torque) or damage to screws and associated components due to overload (excessive tightening torque).

When insufficient tightening torques are used to screw in nozzle tips gaps may form, when excessive tightening torques are used nozzle tips may be damaged. In both cases this may result in leakage during operation.

Customer-specific torque specifications in assembly drawings, e.g. for special designs, always have to be given priority over differing specifications.

Only the values summarised in this operating manual and in chapter „9. Tightening torques“ must be used. Also, please consider whether the tightening torques are valid for lubricated or non-lubricated screws.

5.3 Technical Requirements

Specific connections and hoses are used for supply lines (hydraulic, cooling water).

5.3.1 Tools and operating materials

Tool	Use	Version	EWIKON item no.
Abrasive paper / non-woven web	Exchange of nozzle heater	Various	-
Allen key	For hexagon socket head cap screw according to DIN EN ISO 4062	Depending on system and components. For wrench sizes see chapter „9. Tightening torques“.	-
Allen key, extension for allen key	Deinstallation of HPS III-MH clamping covers Deinstallation of a screw bush Exchange of seal kits of drive units Deinstallation / exchange of valve pins	Various	
Allen key with hole	Exchange of seal kits of drive units	Various	17919 19182
Blowtorch / small burner	Exchange of thermocouples	-	-
Cable markers (cable numbers)	Marking of electrical connections	-	-
Cable tie PA4.6	Fixation of cables, temperature sensors and shrink hoses	100 mm 150 mm	13590 13591
Centering aid	Assemby of L2X systems	Ø 10 mm/Ø 16 mm	19103/19104
Chain slings (with metal tag)	Lifting and moving of hot halves, systems (L2X) and plate assemblies	According to DIN EN 1677 (metal tag according to DIN 685)	-
Clamping device	Maintenance of HPS III-MHR nozzles	-	-
Cordless screwdriver	Exchange of valve pin seal of valve gate systems	-	-
Copper drift	Exchange of HPS III-MH thermocouples	-	-
Crimping tool	Attachment of cable pins to cables	-	-
Depth gauge	Control of check dimensions	-	-
Disassembly sleeve	Deinstallation / exchange of valve pins	Various	See HPS III-NV catalogue
Drift punch	Installation of dowel pins	-	-
Engineers hammer	Maintenance work	-	-
Fabric tube	Protection of cables	Ø 6 mm	13479
Hexagon socket bit	Installation / deinstallation of HPS III-MH clamping covers. Installation with torque wrench only	Various	
Hexagon socket wrench insert	Installation / deinstallation of tip inserts. Installation with torque wrench only	Closed	-
Impact wrench	Deinstallation of a screw bush	1/2 inch adapter	-
Installation wrench	Installation of drive units	Various	See HPS III-NV catalogue
Installation wrench, extension for installation wrench	for L2X nozzles	Various	See L2X catalogue
Insulation stripping pliers	Stripping of cables	-	-
Key with pilot	For hexagon socket screws according to DIN 6912	Key according to DIN 6911	-
Levering and striking tool	Disassembly of hot runner nozzles	Soft, preferably massive brass rod with tapered end, various sizes	-
Lifting beam	Lifting and moving of hot halves, systems (L2X) and plate assemblies	For specifications see manufacturer	-

Tool	Use	Version	EWIKON item no.
Maintenance mouthpiece	Cleaning of flow channels		ask EWIKON
Mandrel	Installation of cable marker	-	-
Metal cable tie	Fixation of cables of L2X systems	-	19667
Multimeter	Measuring of resistance	-	-
Outside micrometre	Control of check dimensions	-	-
Oxy-acetylene burner	Deinstallation of a screw bush	-	-
Pin punch	Maintenance work	Various	-
Pipe wrench	Exchange of thermocouples	-	-
Protective jaws	Protection of hot runner component surfaces which are serviced in a vice outside the injection moulding machine	Material: aluminium	
Ring end fitting	Installation / deinstallation of tip inserts. Installation with torque wrench only	Closed	-
Ring spanner insert	Exchange of HPS III-MH thermocouples	-	-
Ring wrench	Deinstallation of tip inserts	Closed	
Scraper, soft	Cleaning of e.g sealing surfaces	Preferably brass wire, do not use steel wire	-
Screw or threaded bar	Installation of HPS III-MH tip inserts	M4	-
Slotted screwdriver	Maintenance work	Various	-
Side cutter	Cutting cable binders to size without any risk of injury Removal of "cap" (see chapter „6.3.3 Colour and material changes“)	Preferably side cutter for electronics	
Snap ring pliers	Deinstallation of snap rings of drive units	-	-
Soft face hammer	Maintenance work	-	-
Spacer bolt for swivel eye bolt	Lifting and moving of hot halves, systems (L2X) and plate assemblies	-	19160
Spreading pliers	Installation of cable marker	-	-
Striking weight	Deinstallation of a screw bush, Maintenance of L2X systems Deinstallation / exchange of valve pins	-	10578
Striking weight with forked adapter	Exchange of thermocouples	-	-
Swivel eye bolt	Lifting and moving of hot halves, systems (L2X) and plate assemblies	Swivel eye bolt according to Machinery directive 2006/42/EG or DIN EN 1677-1, min. grade 8 = 500 kg load capacity with inclination angle α = 0°. In case of deviations of the angle α > 0° load capacity has to be reduced accor-ding to the manufacturers' instructions.	-
Thread adaptor	Deinstallation of a screw bush	M5	280016-15
Threaded rod for assembly	Assembly of pistons for drive units, Exchange of seal kits Deinstallation / exchange of valve pins	Various	See HPS III-NV catalogue
Torque wrench (calibrated)	For even preload	4-400 Nm (3-295 ft-lb) depending on system and components	-
Torx screwdriver	Maintenance work	Various	-
Tubular hexagon spanner	Installation of valve pins	Various	See HPS III-NV catalogue
Vice	Maintenance work	-	-

Tool	Use	Version	EWIKON item no.
Webbing slings and round slings	Lifting and moving of hot halves, systems (L2X) and plate assemblies	For specifications see manufacturer	-
Wire brush, soft	Cleaning of e.g sealing surfaces	Preferably brass wire, do not use brass-coated wire or steel wire	-
Operating material	**Use**	**Version**	**EWIKON item no.**
Engineers blue	Blueing of all surfaces where the manifold touches the mould.	Customary	-
High temperature (metal-compound) installation paste	Apply to all screw threads to ensure that the screws can be loosened/removed	Ciric A, Molyduval GmbH Collapsible tube (100g) Operation temperature up to 1200°C	17363
(Fully synthetic) High performance grease	Lubrication of components in injection moulds such as ejectors, sliders and guide pillars as well as all moving and sliding mould components. Lubrication of polymer seals for the assembly of pneumatic and hydraulic drive units.	VGS 180, Meusburger GmbH Dispenser 180 g Can 900 g Operation temperature up to 180°C	HB00002 HB00003
Heat transferring paste P12	For thermocouples	Collapsible tube (20 ml)	10023
Industrial adhesive	Gluing of guide bushes for synchronous plate sytems into the synchronous plate	Loctite 648 HG , Henkel	-
WD 40 penetrating oil	Exchange of thermocouples	-	-

Chart 9: Auxiliary and operating material

5.3.2 Standard parts

NOTE!

Only use approved standard parts

Damage to the HPS III hot runner system and/or components of the surrounding injection mould.

- Only standard parts which are approved for operation in EWIKON hot runner systems must be used.

The following standard parts with the associated standards are approved for EWIKON hot runner systems. Particularly for screws the associated strength classes (see chapter 5.5 Assembly of the system / the components) and tightening torques (compare chapter „9. Tightening torques“) must be adhered to.

Standard part	Valid standard	Invalid/old standard
Hexagon socket head cap screw	DIN EN ISO 4762 (ISO 4762)	DIN 912
Hexagon socket head cap screw - low head, with pilot recess	DIN 6912	-
Countersunk screw	DIN EN ISO 10642 (ISO 10642)	DIN 7991
Parallel pin	DIN EN ISO 2338 (ISO 2338)	DIN 7
Parallel pin with internal thread	DIN EN ISO 8735 (ISO 8735)	DIN 7979
Flat washer	DIN EN ISO 7089 (ISO 7089)	DIN 125-1 (DIN 125)
Flat washer	DIN EN ISO 7092 (ISO 7092)	DIN 453-1 und DIN 433-2
Feather key	DIN EN ISO 773 (ISO 773)	-
Lock ring	DIN 471	-
Split pin	DIN EN ISO 8752 (ISO 8752)	DIN 1481

Chart 10: Approved standard parts for EWIKON hot runner systems

5.4 Checks before installation

The HPS III hot runner system is subject to comprehensive testing by the manufacturer before delivery. For safety reaons (transport or storage damage or damage to the hot runner system when preparing installation) we recommend that you check the hot runner systems for damage just before installing it. To exclude any damage during installation all information about checks which are part of this operating instructions must be adhered to.

5.4.1 Notes on mould layout

The following factors must be observed for the mould layout:

- Installation notes for the mould design
- Mould stability
- Sealing of the hot runner system
- Cooling
- Material
- Preload (calculation of gap dimension)
- Check of gate diameter

NOTE!

See the EWIKON HPS III catalogue, chapter 5 "General assembly notes" , for a detailled description of general assembly notes and mould layout. The current version of the catalogue can be found on www.ewikon.com in the download section.

5.4.2 Standard dimensions of hot runner systems

All given installation dimensions, fit sizes, form and location tolerances of the mould plates surrounding the hot runner system have to be checked (for specifications please refer to the current catalogues on www.ewikon.com in the download section and/or the attached order-related documents). An overview of all relevant dimensions is given in Picture 22. Particularly the following dimensions have to be checked:

- Check of the fit sizes in the tip sealing area / sealing collar of the tip insert and the installation contour of the mould plate.
- Height dimensions (X dimension, thickness of the clamping plate) have to be checked.
- Measuring of the mould plate: important for calculating the installation depth of the nozzle (X dimension)
- Thickness of the nozzle retainer frame plate (at at least 2 different ends of the plate)
- Installation depth for nozzle (from the contact surface of the nozzles to the top edge of the mould plate)
- Installation depth of pressure piece with centering (from the contact surface of the pressure pad until its top edge)
- Thickness of the manifold with screwed-in pressure pads H3 (from top side of pressure pad to nozzle sealing surface of the respective nozzle)
- Actual value of the gap dimension ΔS
- Thickness of the clamping plate. If pressure pads are installed in the clamping plate they also have to be measured and considered when calculating the gap dimension (special design).
  This applies to systems with single nozzles in particular as only the locating ring fixes the single nozzle in the installati-on space. If there is a gap the injection pressure (pressure build-up around the cavity, if it is filled) causes the nozzle to move back to the locating ring, possibly resulting in leaks.

5.4.3 Dimensions to be checked for a hot runner system with HPS III-MHL and HPS III-MHR nozzles

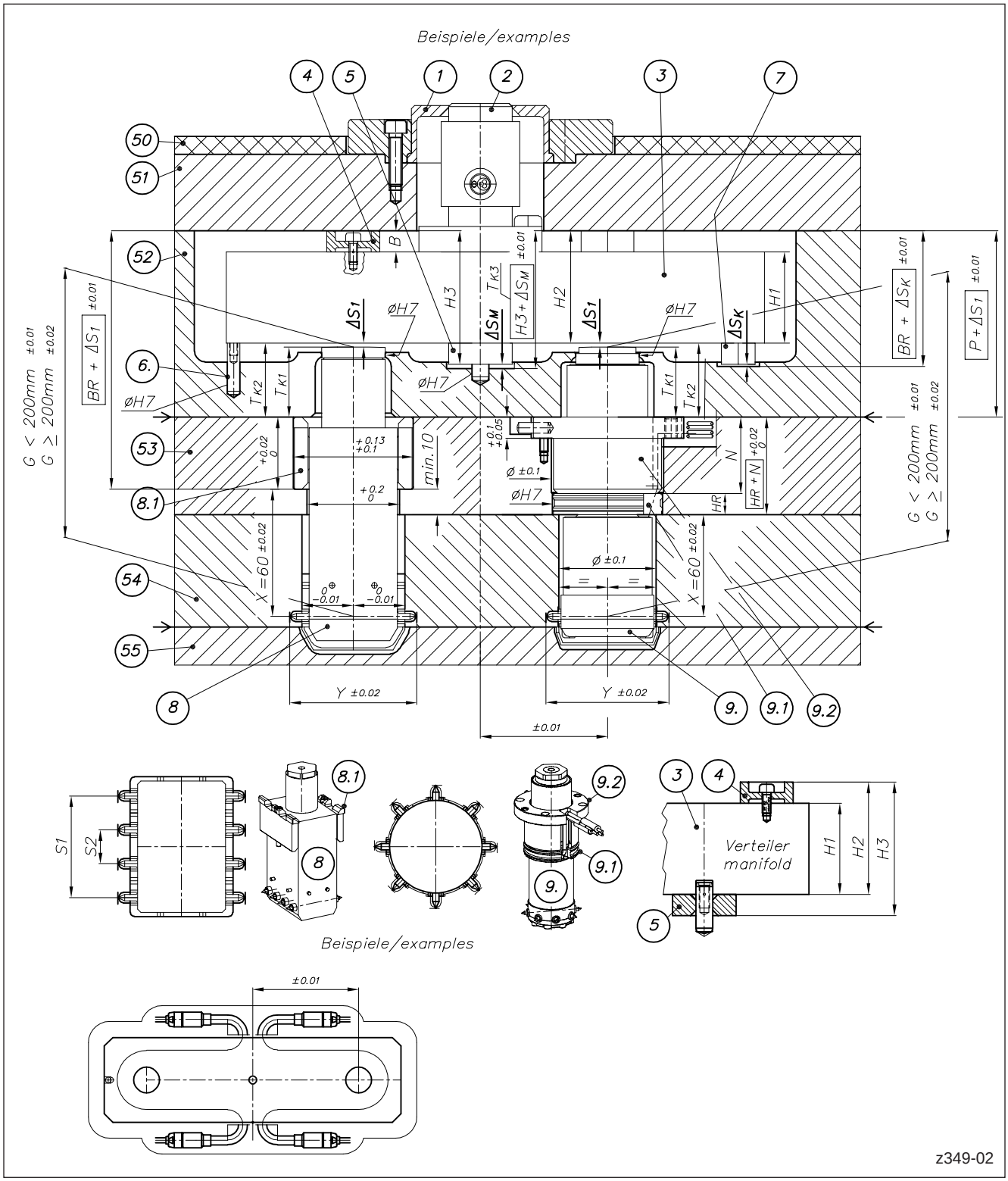

Picture 22: Example: Dimensions to be checked for a hot runner system with HPS III-MHL (left) and HPS III-MHR (right) nozzles

EWIKON

Example: Dimensions to be checked for a hot runner system with HPS III-MHL and HPS III-MHR nozzles

ΔS_1	Delta S_1: Gap between lower surface of manifold and end surface of nozzle $\Delta S_1 = T_{K2} - T_{K1}$
ΔS_K	Delta S_K: Gap between tilting preventing pad and base of the corresponding recess
ΔS_M	Delta S_M: Gap between pressure pad with centering and base of the corresponding recess.
BR	Installation space (for EWIKON parts)
H1	Manifold height
H2	Manifold height + top pressure pad
H3	Manifold height + pressure pad with centering + top pressure pad
P	Height of nozzle retainer frame plate
B	Height of top pressure pad
N	Height of hold-down device
HR	Retainer ring height
G	Height from centre axis of tip to end of nozzle
X	X dimension of nozzle
T_{K1}	Standard dimension to determine gap dimension
T_{K2}	Standard dimension to determine gap dimension
T_{K3}	Standard dimension to determine gap dimension

Pos. 1	Locating ring
Pos. 2	Sprue bush
Pos. 3	Manifold
Pos. 4	Top pressure pad (depending on nozzle type)
Pos. 5	Pressure pad with centering
Pos. 6	Lock against rotation of manifold
Pos. 7	Tilting preventing pad of manifold
Pos. 8	HPS III-MHL nozzle
Pos. 8.1	Bar
Pos. 9	HPS III-MHR nozzle
Pos. 9.1	Retainer ring
Pos. 9.2	Hold-down device
Pos. 50	Insulating plate
Pos. 51	Clamping plate (e.g. 1.2312) > 1000 N/mm²
Pos. 52	Nozzle retainer frame plate (e.g. 1.2312) > 1000 N/mm²
Pos. 53	Intermediate plate
Pos. 54	Contour plate
Pos. 55	Contour plate (moving mould half)

5.5 Installation of HPS III adapter systems

5.5.1 Installation of adapter systems with nozzles for standard and front installation

For use with the following nozzle types:	HPS III-MH111	HPS III-MH112

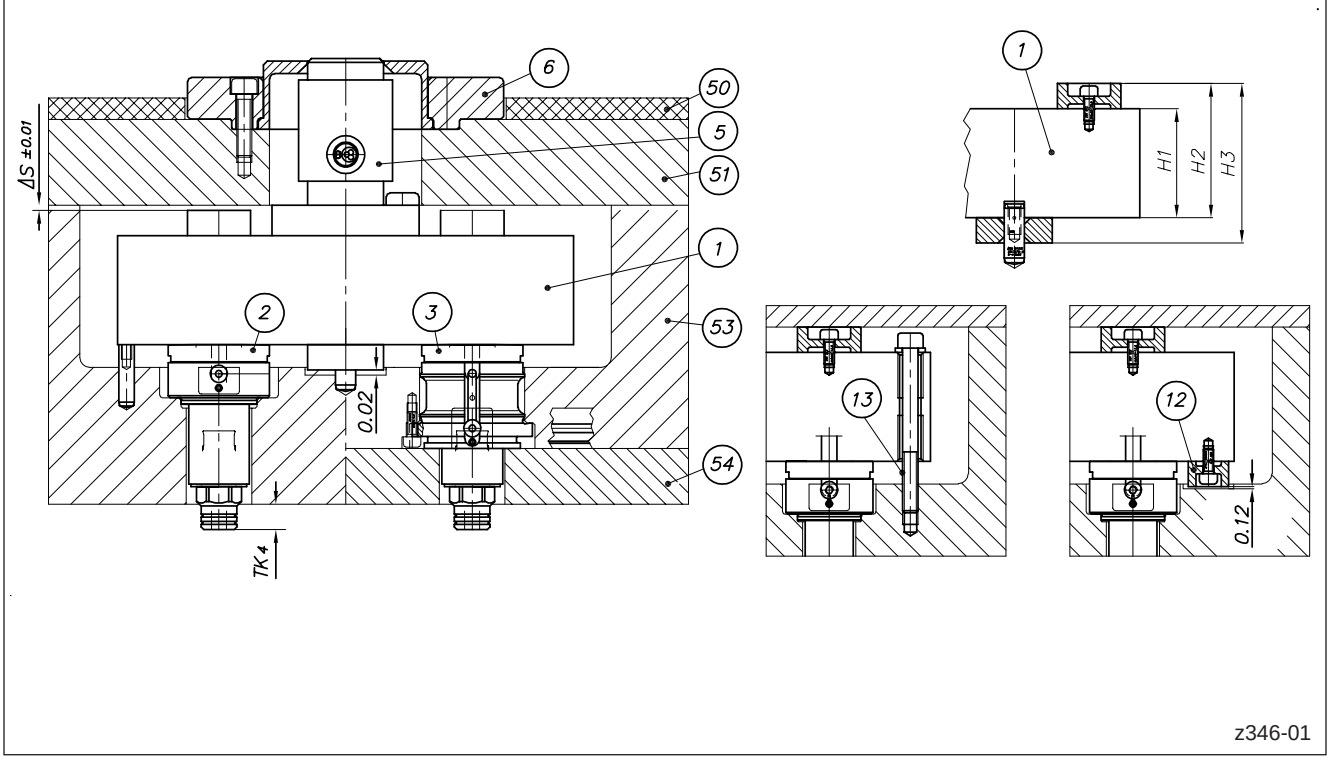

Picture 23: General layout of an adapter system with nozzles for standard and front installation

Pos. 1 Manifold

Pos. 2 Adapter nozzle for standard installation

Pos. 3 Adapter nozzle for front installation

Pos. 5 Sprue bush

Pos. 6 Locating ring

Pos. 12 Tilting preventing pad (depending on order)

Pos. 13 Screw connection for manifold (only for standard installation)

Pos. 50 Insulating plate

Pos. 51 Clamping plate

Pos. 53 Nozzle retainer frame plate

Pos. 54 Intermediate plate

NOTE!

Read operating manual

In the installation process described in the following hazards for the personal health are listed explicitly.

Furthermore, during installation the warning, safety and installation notes for installation of EWIKON hot runner systems and components as specified in chapter „5.2 General safety instructions“ must be followed!

NOTE!

Dimensional check

Before installation the installation dimensions as listed in chapter „5.4 Checks before installation“ must be checked and compared with the values provided with the installation drawing.

Use approved standard parts only

Only standard parts which are approved for use in EWIKON hot runner systems must be used. See chapter „5.3 Technical Requirements“.

Screw connection for manifold

The screw connection for the manifold (pos. 13) is only required when nozzles for standard installation are used. **When nozzles for front installation are installed the manifold must not be screw connected.**

Installation of an adapter nozzle for standard installation

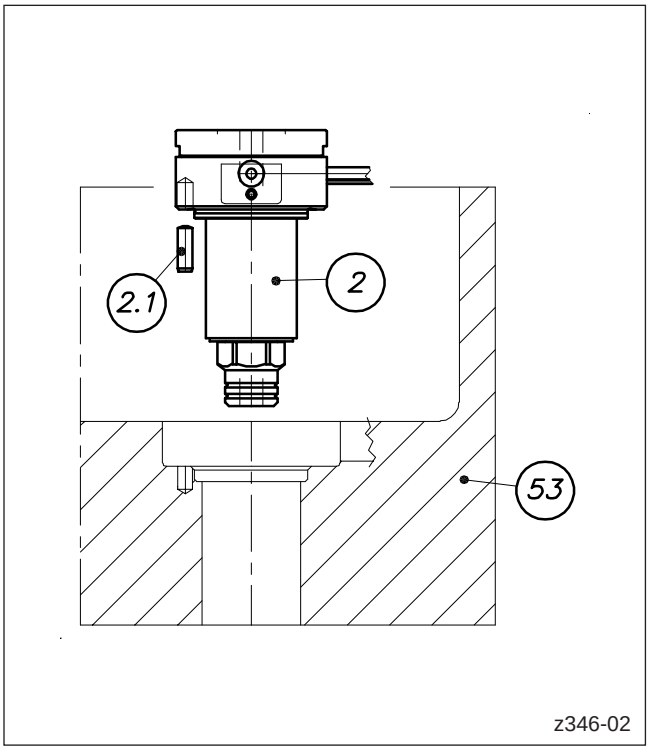

Picture 24: Standard installation of an adapter nozzle

HAZARD!

Connected power supply during installation

Risk of deadly electric shock or severe injuries due to live components.

- The hot runner system and the mould have to be disconnected from the voltage source during installation.

WARNING!

Sharp edges and heavy components

- Cut injuries to body and extremities, mainly to the hands.
- Crushing of fingers or hand.

Control of live components before installation

The electrical equipment of the hot runner system should be checked, especially those areas which will no longer be accessible after installation. Physical injuries such as an electric shock can be prevented that way.

Please check

- if cables are kinked or squeezed.
- if cable insulations are undamaged.

1. Insert the dowel pin (pos. 2.1, ISO 2338-A, lock against rotation for tip exchange) in the corresponding cutout in the nozzle retainer frame plate (pos. 53).
2. Die Düse (pos. 2) vorsichtig und ohne zu verkanten in die Düsenhalterahmenplatte (pos. 53) einschieben. Dabei die Position des Zylinderstifts (pos. 2.1) beachten. At the same time carefully bend the connection cables of the nozzle according to the position of the cable channels. The minimum bending radius is 15 mm. The connection cables can only be bended once.
3. Place the connection cables in the cable channels and mark them according to their function (power / thermocouple) and position in the mould.

Installation of an adapter nozzle for front installation

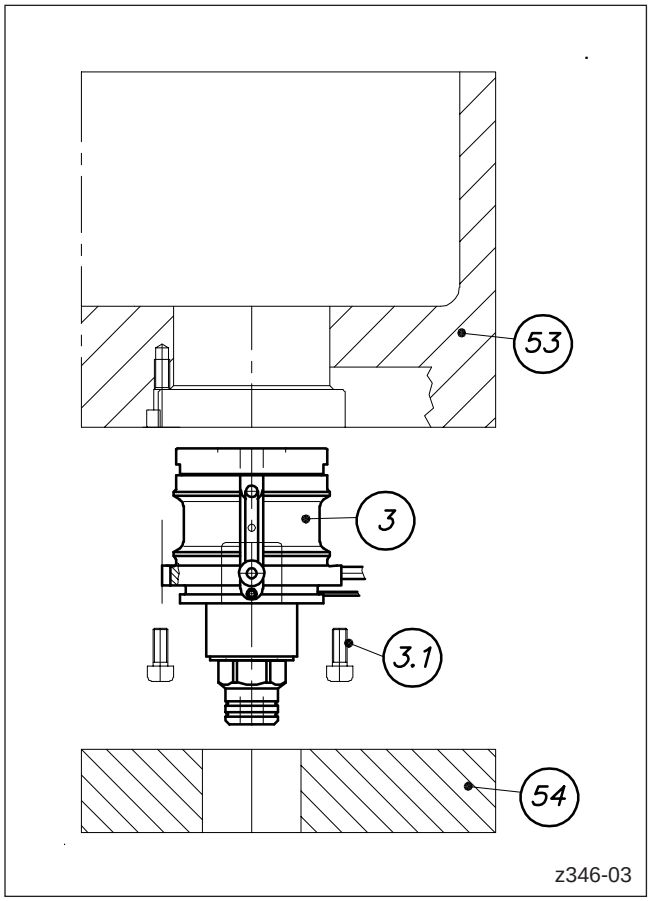

Picture 25: Front installation of an adapter nozzle

HAZARD!

Connected power supply during installation

Risk of deadly electric shock or severe injuries due to live components.

- The hot runner system and the mould have to be disconnected from the voltage source during installation.

WARNING!

Sharp edges and heavy components

- Cut injuries to body and extremities, mainly to the hands.
- Crushing of fingers or hand.

Control of live components before installation

The electrical equipment of the hot runner system should be checked, especially those areas which will no longer be accessible after installation. Physical injuries such as an electric shock can be prevented that way.

Please check

- if cables are kinked or squeezed.
- if cable insulations are undamaged.

1. Install the nozzle (pos. 3) in the nozzle retainer frame plate (pos. 53).
   At the same time carefully bend the connection cables of the nozzle according to the position of the cable channels. The minimum bending radius is 15 mm. The connection cables can only be bended once.
   Fix the nozzle (pos. 3) by screwing in two socket head screws (pos. 3.1, ISO 4762 - min. 8.8) up to the stop. Tighten with matching torque. See chapter „9.2 Tightening torques for manifold screw connections and retaining screws“.
2. Place the connection cables in the cable channels and mark them according to their function (power / thermocouple) and position in the mould.
3. Carefully slide the intermediate plate (pos. 54) over the nozzle. The sealing collar of the tip insert must not be damaged. Screw intermediate plate (pos. 54) and nozzle retainer frame plate (pos. 53) together.

Manifold installation - preliminary measures

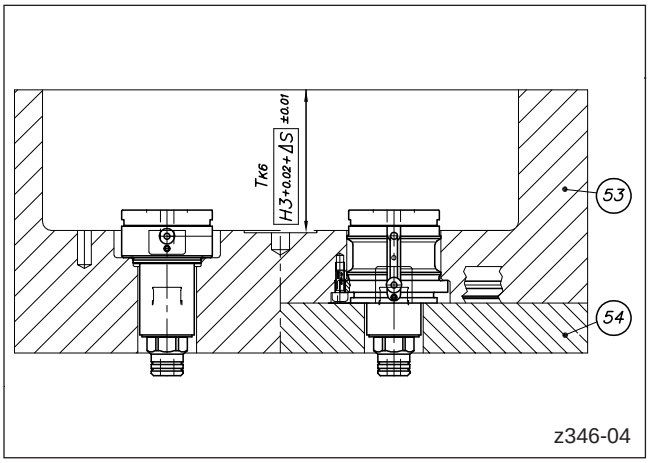

Picture 26: Check of reference dimensions before installation of manifold (left: standard installation, right: front installation)

After installation of adapter nozzles check the dimension **TK6 = H3 + 0.02 + ΔS** between the upper surface of the nozzle retainer frame plate (pos. 53) and the contact surface for the centre support of the manifold and compare it to the value given in the drawing provided by EWIKON.

Installation of the sprue bush on the manifold

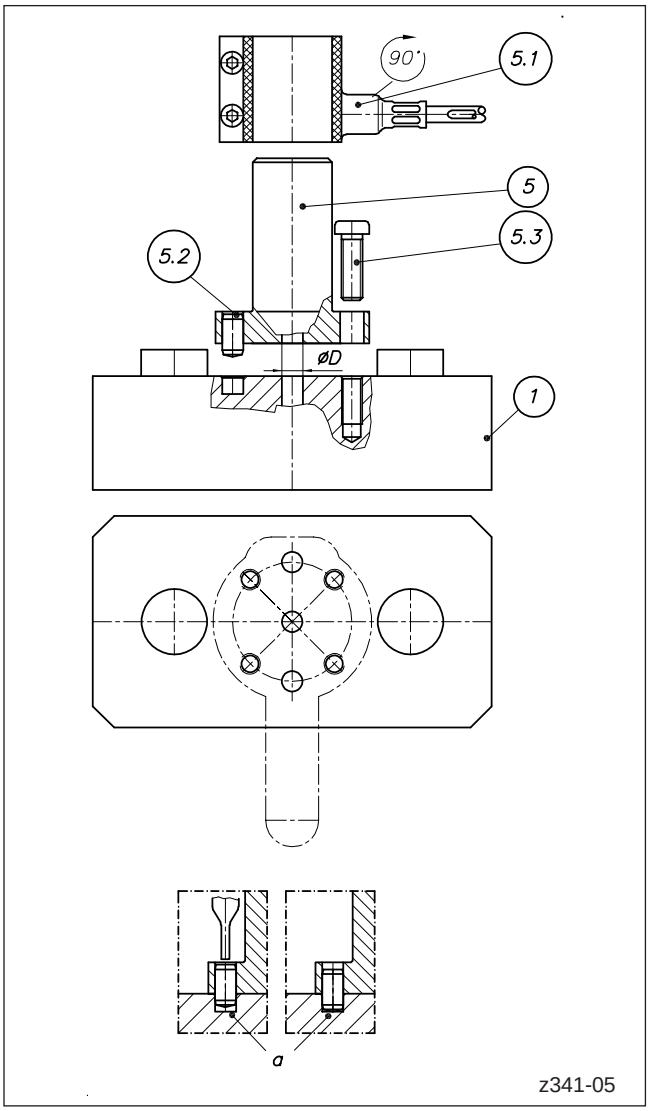

Picture 27: Installation of a sprue bush

NOTE!

The installation process described in the folllowing will only be required if a sprue bush is delivered as spare part.

A new manifold has the sprue bush pre-installed.

HAZARD!

Connected power supply during installation

Risk of deadly electric shock or severe injuries due to live components.

- The hot runner system and the mould have to be disconnected from the voltage source during installation.

1. The diameter D of the sprue bush (pos. 5) must be identical to the diameter of the flow channel entrance in the manifold (pos. 1).
2. Insert dowel pins (pos. 5.2, ISO 8735) through the bores in the sprue bush into the fit bores in the manifold (pos. 1).
3. Screw in the socket head screws with flat head (pos. 5.3, DIN 6912 - 10.9) crosswise and tighten with matching torque. See chapter „9. Tightening torques“.
4. Drive the dowel pins (pos. 5.2) to the end of the fit bores in the manifold by using a punch (pos. α). The front diameter of the punch should always be smaller than the tapped blind hole bore in the dowel pin in order not to damage the thread.
5. Install the heater band (pos. 5.1) approx. 5 mm above the socket head screws (pos. 5.3). and tighten it.

Manifold installation - installation procedure

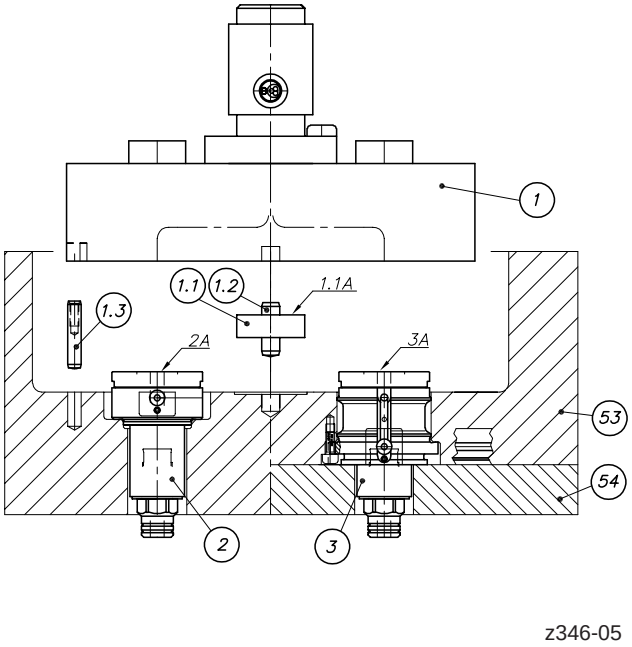

Picture 28: Installation of manifold (left: standard installation, right: front installation)

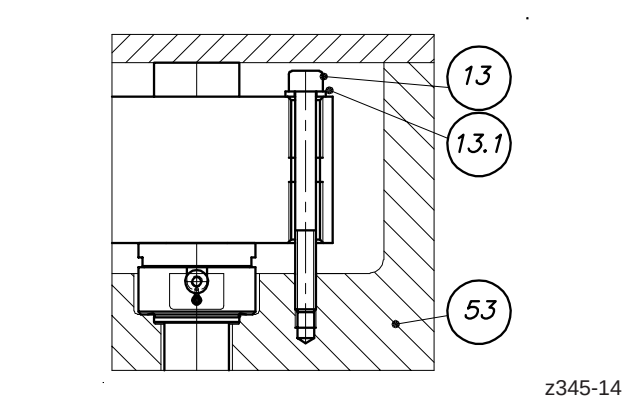

Picture 29: Screw connection for manifold with socket head screws (only for standard installation!)

NOTE!

Blueing of nozzles for front installation

Before blueing nozzles for front installation the intermediate plate (pos. 54) must be installed because otherwise the transfer of the blue is falsified.

HAZARD!

Connected power supply during installation

Risk of deadly electric shock or severe injuries due to live components.

- The hot runner system and the mould have to be disconnected from the voltage source during installation.

WARNING!

Sharp edges and heavy components

- Cut injuries to body and extremities, mainly to the hands.
- Crushing of fingers or hand.

Control of live components before installation

The electrical equipment of the hot runner system should be checked, especially those areas which will no longer be accessible after installation. Physical injuries such as an electric shock can be prevented that way.

Please check

- if cables are kinked or squeezed.
- if cable insulations are undamaged.

1. Insert the locating pin (pos. 1.2, ISO 8735) of the centre support (pos. 1.1) into the corresponding bore in the nozzle retainer frame plate (pos. 53).
2. Slide the centre support (pos. 1.1) over the locating pin (pos. 1.2).
3. Insert the dowel pin (pos. 1.3, lock against rotation, ISO 8735) into the bore.
4. Apply a thin and even coat of engineer's blue to the faces of the nozzle heads (surfaces 2A and 3A respectively) as well as to the face of the centre support (surface 1.1A) (see adjoining note).
5. Check the position of the connection cables of the nozzles (pos. 2, 3) again and align the connection cables of the manifold (pos. 1) to prevent squeezing when the manifold is installed.
6. Insert the manifold (pos. 1) carefully into the nozzle retainer frame plate (pos. 53). Pay attention to the position of the locating pin (pos. 1.2) and the lock against rotation (pos. 1.3).
7. Remove the manifold again (pos. 1) and check the transfer of the blue. The surfaces 2A and 3A must show an even transfer of the blue. The surface 1.1A must show no transfer of the blue because it must have a distance of 0.02 mm to the manifold.
8. Clean all surfaces from engineer's blue and insert the manifold (pos. 1) again. Place the connection cables in the cable channels and mark them according to their function (power / thermocouple) and position in the mould.
9. **The manifold must only be screw-connected when using nozzles for standard installation.**
   Screw the manifold to the nozzle retainer frame plate (pos. 53) by using socket head screws (pos. 13, ISO 4762 - min. 8.8) and plain washers (pos. 13.1, ISO 7089). Screw the socket head screws in to the stop, then tighten with matching torque. See chapter „9.2 Tightening torques for manifold screw connections and retaining screws“.

Manifold installation - check of clearance ΔS, installation of clamping plate and locating ring

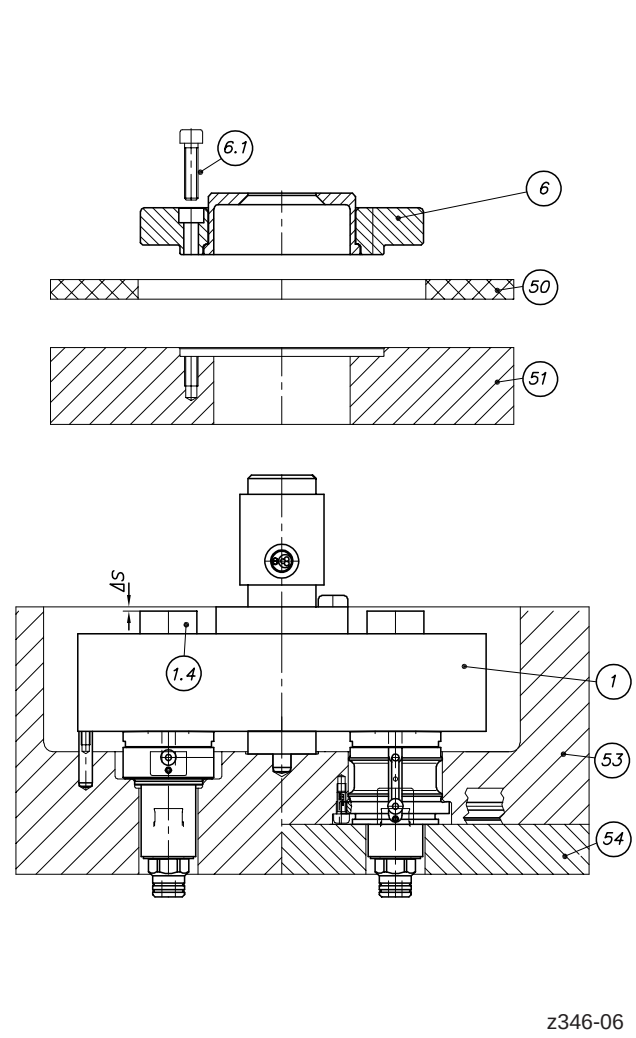

Picture 30: Check of clearance ΔS and subsequent installation steps

HAZARD!

Connected power supply during installation

Risk of deadly electric shock or severe injuries due to live components.

- The hot runner system and the mould have to be disconnected from the voltage source during installation.

WARNING!

Sharp edges and heavy components

- Cut injuries to body and extremities, mainly to the hands.
- Crushing of fingers or hand.

Control of live components before installation

The electrical equipment of the hot runner system should be checked, especially those areas which will no longer be accessible after installation. Physical injuries such as an electric shock can be prevented that way.

Please check

- if cables are kinked or squeezed.
- if cable insulations are undamaged.

NOTE!

All clearances must be checked in cold condition!

In case of deviatons the clearances must be adjusted in an appropriate way (e.g. by machining the nozzle retainer frame plate or the pressure pads of the manifold).

Attention: The adjustment must not have influence on the dimension X of the nozzle!

Checking of clearance when using nozzles for front installation

When nozzles for front installation are installed the intermediate plate (pos. 54) must be installed before the clearance **ΔS** is checked. Otherwise the measurement is falsified.

1. Check the clearance ΔS between the surface of the upper pressure pad (pos. 1.4) and the surface of the nozzle retainer frame plate (pos. 53) and compare it to the value given in the drawing provided by EWIKON.
2. Install the clamping plate (pos. 51) and the insulating plate (pos. 50).
3. Install the locating ring (pos. 6) and fix it with socket head screws (pos. 6.1, ISO 4762 - 12.9). Tighten with matching torque. See chapter „9. Tightening torques“.
4. Wire the nozzles and the manifold according to the wiring scheme. Please pay attention to the notes in chapter „5.7 Electrical connection of hot runner systems“.
5. In order to clearly identify the hot runner system attach the type plate included in the delivery prominently to the operator side of the mould.

5.6 Installation of HPS III hot runner systems for direct side gating

5.6.1 Installation of systems with HPS III-MHL100/200 or HPS III-MHR100/200 nozzles

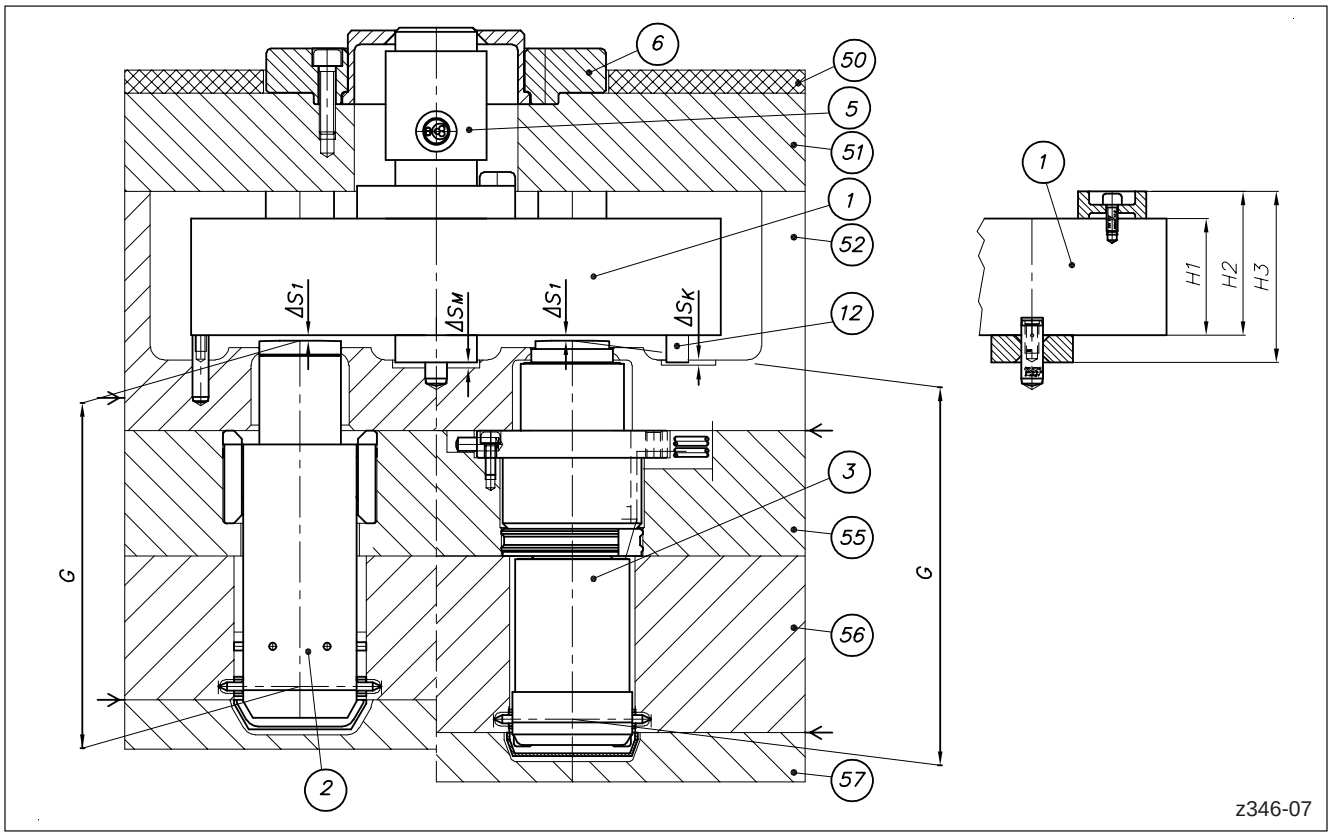

Picture 31: General layout of a system with HPS III-MH100/200 nozzles

Pos. 1 Manifold

Pos. 2 HPS III-MHL nozzle (Example: HPS III-MHL100)

Pos. 3 HPS III-MHR nozzle (Example: HPS III-MHR100)

Pos. 5 Sprue bush

Pos. 6 Locating ring

Pos. 12 Tilting preventing pad (depending on order)

Pos. 50 Insulating plate

Pos. 51 Clamping plate

Pos. 52 Manifold frame plate

Pos. 55 Nozzle retainer plate

Pos. 56 Contour plate (fixed mould half)

Pos. 57 Contour plate (moving mould half)

NOTE!

Read operating manual

In the installation process described in the following hazards for the personal health are listed explicitly.

Furthermore, during installation the warning, safety and installation notes for installation of EWIKON hot runner systems and components as specified in chapter „5.2 General safety instructions“ must be followed!

NOTE!

Please make sure that before each installation or deinstallation of a HPS III-MH nozzle the tip inserts are deinstalled! A HPS III-MH nozzle is always delivered with deinstalled tip inserts. The tip inserts are separately packed and included in the delivery.

NOTE!

Dimensional check

Before installation the installation dimensions as listed in chapter „5.4 Checks before installation“ must be checked and compared with the values provided with the installation drawing.

Use approved standard parts only

Only standard parts which are approved for use in EWIKON hot runner systems must be used. See chapter „5.3 Technical Requirements“.

HHPS III-MHL 100/200 nozzle - installation of nozzle body

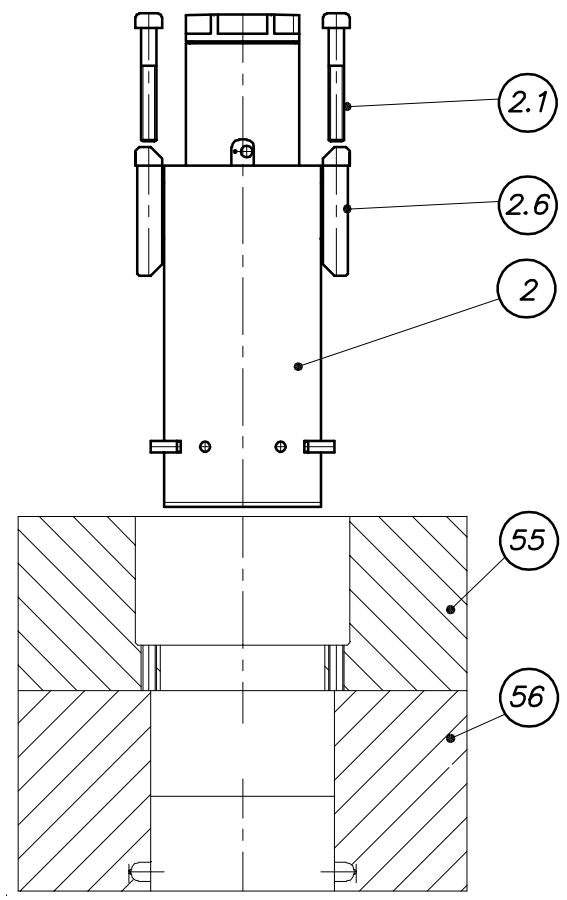

Picture 32: Installation of nozzle body

HAZARD!

Connected power supply during installation

Risk of deadly electric shock or severe injuries due to live components.

- The hot runner system and the mould have to be disconnected from the voltage source during installation.

WARNING!

Sharp edges and heavy components

- Cut injuries to body and extremities, mainly to the hands.
- Crushing of fingers or hand.

Control of live components before installation

The electrical equipment of the hot runner system should be checked, especially those areas which will no longer be accessible after installation. Physical injuries such as an electric shock can be prevented that way.

Please check

- if cables are kinked or squeezed.
- if cable insulations are undamaged.

1. Insert the nozzle body (pos. 2) carefully and without tilting into the nozzle retainer plate (pos. 55), until the bars at the side (pos. 2.6) reach the end stop.
   At the same time carefully bend the connection cables of the nozzle according to the position of the cable channels. The minimum bending radius is 15 mm. The connection cables can only be bended once.
2. Place the connection cables in the cable channels and mark them according to their function (power / thermocouple) and position in the mould.
3. Insert the socket head screws (pos. 2.1, ISO 4762 - min. 8.8) from the back through the bores in the bars and screw them in up to the stop. Tighten with matching torque. See chapter „9.2 Tightening torques for manifold screw connections and retaining screws“.
4. Wire the nozzle according to the wiring scheme. Please pay attention to the notes in chapter
   „5.7 Electrical connection of hot runner systems“.

HPS III-MHL100/200 nozzle - installation of tip inserts

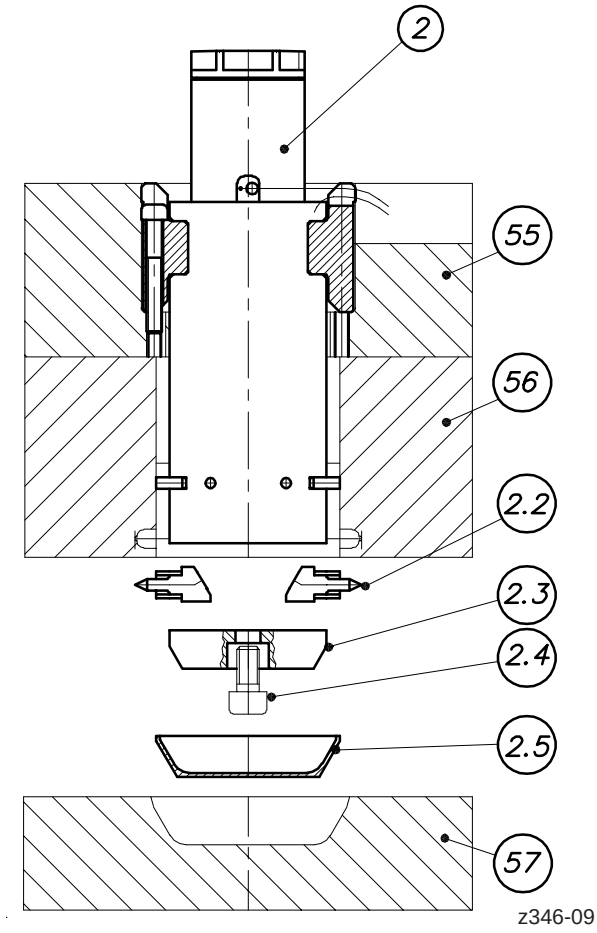

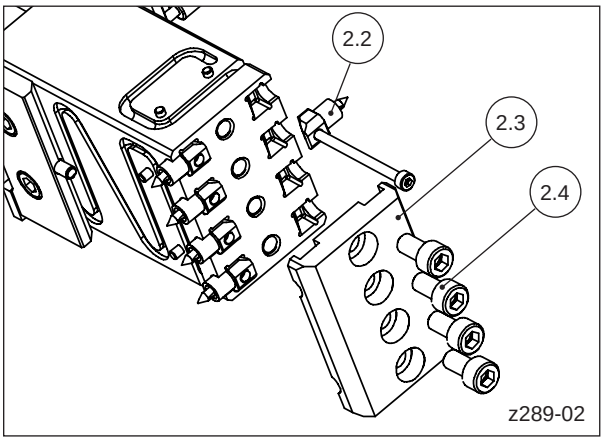

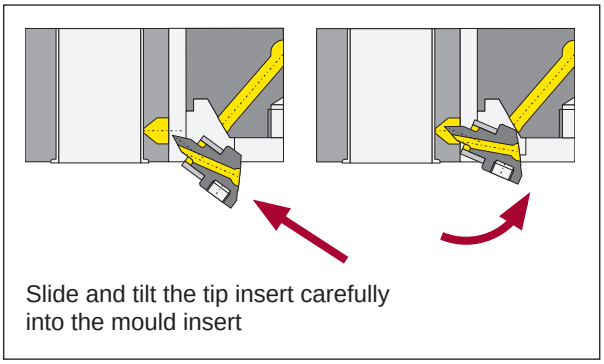

Picture 33: Installation of tip inserts

WARNING!

Hot surfaces

Burns to the body caused by hot surfaces.

1. Install tip inserts (pos. 2.2). Ensure that they are positioned correctly and that the sealing surfaces between tip insert and nozzle are clean. A screw M4 or a threaded rod can be screwed into the tip insert as an assembly aid.
2. Attach clamping cover (pos. 2.3) and fix it with the socket head screws M6 (pos. 2.4, ISO 4762 - 12.9), with the socket head screws being screwed from the centre outwards. Tighten with half of the matching torque (please see point 4).
3. Heat up nozzle to processing temperature (maximum nozzle temperature 350°C) and warm up the mould until the mould temperature is reached. Keep the resulting ΔT (difference between processing and mould temperature) for at least 10 minutes before finally retightening the screws with the matching torque. Not adhering to this procedure can result in damaged sealing sleeves and leakage.
4. Retighten socket head screws M6x12 with the matching torque from the centre outwards. The torque value is engraved on the clamping cover (Pos 2.3).
   Also see chapter „9.3 Tightening torques for clamping covers of HPS III-MH nozzles“.
5. Install heat protective cover (pos. 2.5, provided by the customer).

HPS III-MHR100/200 nozzle - installation of nozzle body

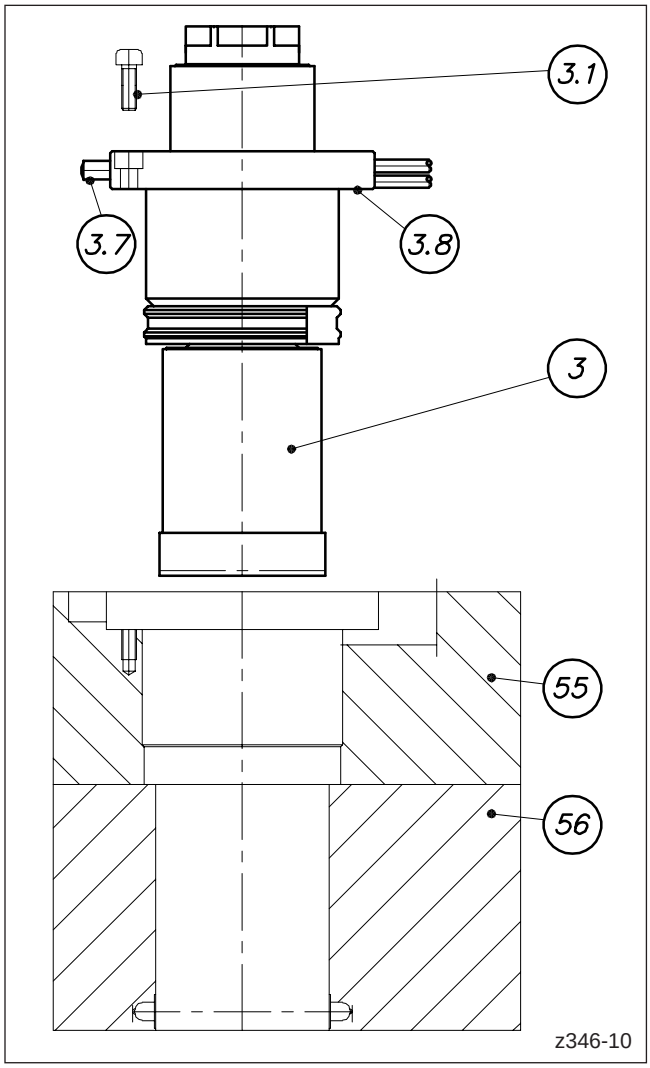

Picture 34: Installation of nozzle body

HAZARD!

Connected power supply during installation

Risk of deadly electric shock or severe injuries due to live components.

- The hot runner system and the mould have to be disconnected from the voltage source during installation.

WARNING!

Sharp edges and heavy components

- Cut injuries to body and extremities, mainly to the hands.
- Crushing of fingers or hand.

Control of live components before installation

The electrical equipment of the hot runner system should be checked, especially those areas which will no longer be accessible after installation. Physical injuries such as an electric shock can be prevented that way.

Please check

- if cables are kinked or squeezed.
- if cable insulations are undamaged.

1. Insert the nozzle body (pos. 3) carefully and without tilting into the nozzle retainer plate (pos. 55), until the retainer ring (pos. 3.8) reaches the end stop.
   Pay attention to the correct positioning of the dowel pin (pos. 3.7, ISO 2338-A, lock against rotation) in the retainer ring (pos. 3.8). It must fit into the corresponding cutout in the nozzle retainer plate.
   At the same time carefully bend the connection cables of the nozzle according to the position of the cable channels. The minimum bending radius is 15 mm. The connection cables can only be bended once.
2. Place the connection cables in the cable channels and mark them according to their function (power / thermocouple) and position in the mould.
3. Insert the socket head screws (pos. 3.1, ISO 4762 - min. 8.8) from the back through the bores in the retainer ring and screw them in up to the stop. Tighten with matching torque. See chapter „9.2 Tightening torques for manifold screw connections and retaining screws“.
4. Wire the nozzle according to the wiring scheme. Please pay attention to the notes in chapter „5.7 Electrical connection of hot runner systems“.

HPS III-MHR100/200 nozzle - installation of tip inserts

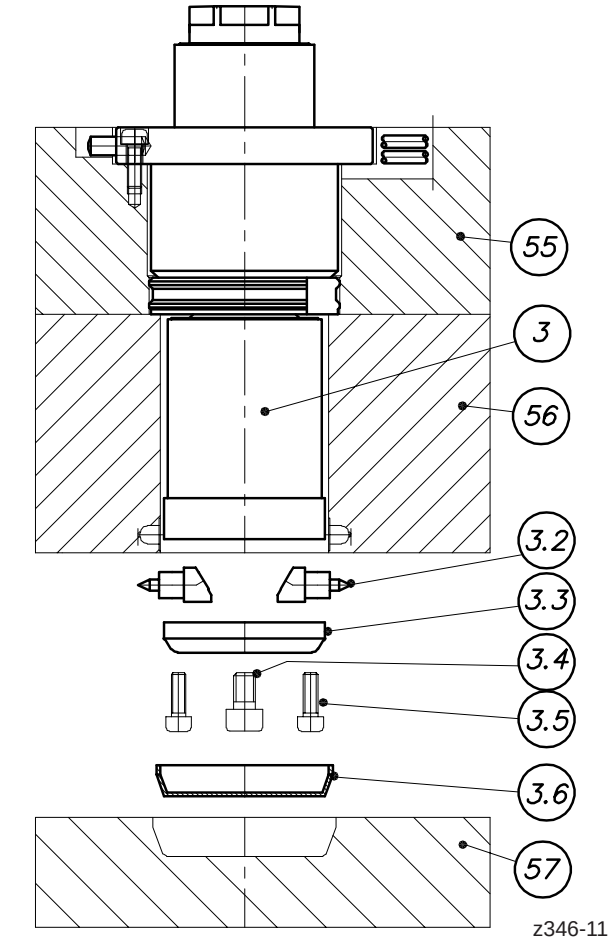

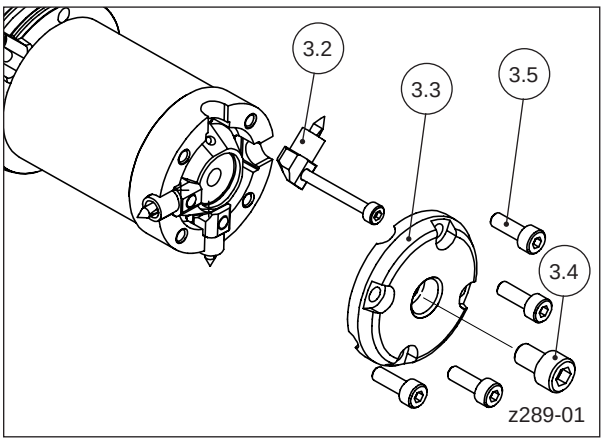

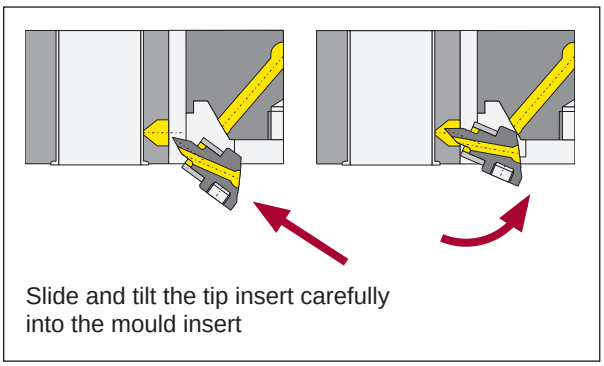

Picture 35: Installation of tip inserts

WARNING!

Hot surfaces

Burns to the body caused by hot surfaces.

1. Install tip inserts (pos. 3.2). Ensure that they are positioned correctly and that the sealing surfaces between tip insert and nozzle are clean. A screw M4 or a threaded rod can be screwed into the tip insert as an assembly aid.
2. Attach clamping cover (pos. 3.3) and fix it with the central socket head screw M6 (pos. 3.4, ISO 4762 - 12.9). Tighten with half of the matching tightening torque (please see point 5).
3. Screw in socket head screws M4 (pos. 2.5, ISO 4762 - 12.9) crosswise. Tighten with half of the matching tightening torque (please see point 6).
4. Heat up nozzle to processing temperature (maximum nozzle temperature 350°C) and warm up the mould until the mould temperature is reached. Keep the resulting ΔT (difference between processing and mould temperature) for at least 10 minutes before finally retightening the screws with the matching torque. Not adhering to this procedure can result in damaged sealing sleeves and leakage.
5. Retighten central socket head screw M6 (pos. 3.4, ISO 4762 - 12.9) with the matching torque. The torque value is engraved on the clamping cover (Pos 3.3).
   Also see chapter „9.3 Tightening torques for clamping covers of HPS III-MH nozzles“.
6. Retighten socket head screws M4 (pos. 3.5, ISO 4762 - 12.9) crosswise with the matching torque. The torque value is engraved on the clamping cover (pos 3.3).
   Also see chapter „9.3 Tightening torques for clamping covers of HPS III-MH nozzles“.
7. Install heat protective cover (pos. 3.6, provided by the customer).

Manifold installation - preliminary measures - check of clearance ΔSM

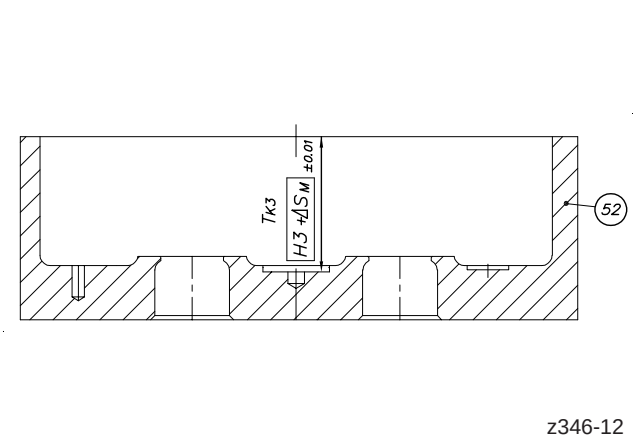

Picture 36: Check of reference dimensions before installation of manifold

NOTE!

All clearances must be checked in cold condition!

In case of deviatons the clearances must be adjusted in an appropriate way (e.g. by machining the nozzle retainer frame plate or the pressure pads of the manifold).

Attention: The adjustment must not have influence on the dimension X of the nozzle!

Check clearance ΔSM:

Measure reference dimension **TK3** in the manifold frame plate (pos. 52) and compare it to the value given in the drawing provided by EWIKON. The drawing also contains the dimension **H3** of the manifold.

We have: $\mathbf{T_{K3} = H3 + \Delta S_M}$

This results in:

$\mathbf{\Delta S_M = T_{K3} - H3}$

Installation of the sprue bush on the manifold

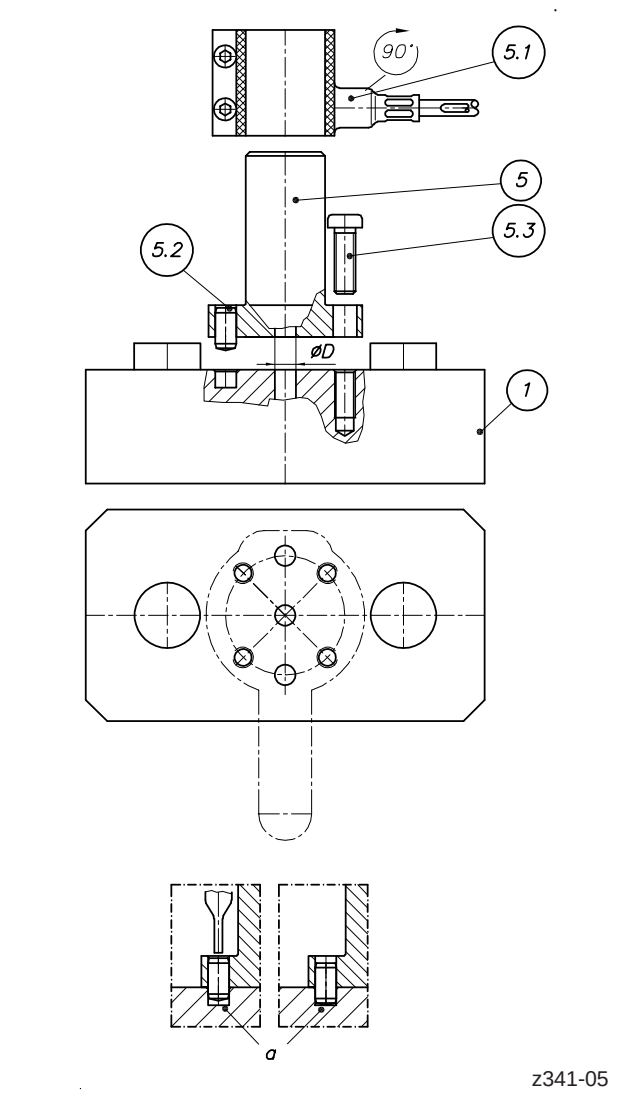

Picture 37: Installation of a sprue bush

NOTE!

The installation process described in the folllowing will only be required if a sprue bush is delivered as spare part.

A new manifold has the sprue bush pre-installed.

HAZARD!

Connected power supply during installation

Risk of deadly electric shock or severe injuries due to live components.

- The hot runner system and the mould have to be disconnected from the voltage source during installation.

1. The diameter D of the sprue bush (pos. 5) must be identical to the diameter of the flow channel entrance in the manifold (pos. 1).
2. Insert dowel pins (pos. 5.2, ISO 8735) through the bores in the sprue bush into the fit bores in the manifold (pos. 1).
3. Screw in the socket head screws with flat head (pos. 5.3, DIN 6912 - 10.9) crosswise and tighten with matching torque. See chapter „9. Tightening torques“.
4. Drive the dowel pins (pos. 5.2) to the end of the fit bores in the manifold by using a punch (pos. α). The front diameter of the punch should always be smaller than the tapped blind hole bore in the dowel pin in order not to damage the thread.
5. Install the heater band (pos. 5.1) approx. 5 mm above the socket head screws (pos. 5.3) and tighten it.

Manifold installation - installation procedure

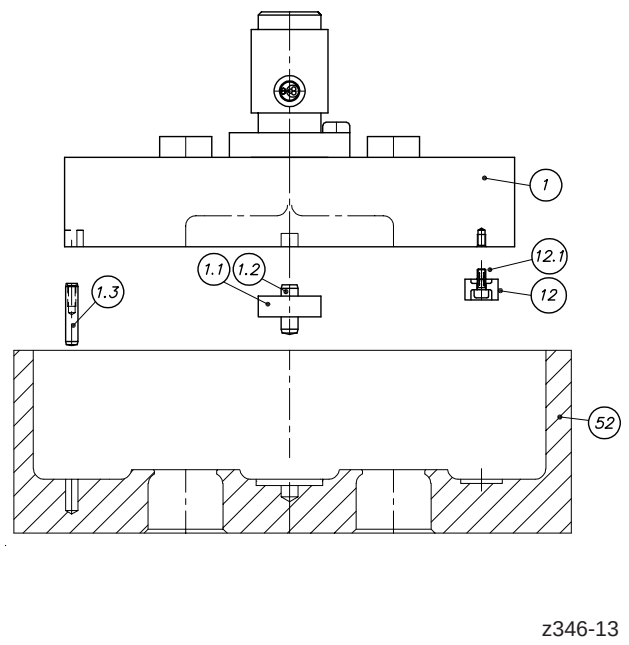

Picture 38: Installation of manifold for a HPS III hot runner system with HPS III-MH100/200 nozzles for direct side gating

HAZARD!

Connected power supply during installation

Risk of deadly electric shock or severe injuries due to live components.

- The hot runner system and the mould have to be disconnected from the voltage source during installation.

WARNING!

Sharp edges and heavy components

- Cut injuries to body and extremities, mainly to the hands.
- Crushing of fingers or hand.

Control of live components before installation

The electrical equipment of the hot runner system should be checked, especially those areas which will no longer be accessible after installation. Physical injuries such as an electric shock can be prevented that way.

Please check

- if cables are kinked or squeezed.
- if cable insulations are undamaged.

1. Insert the locating pin (pos. 1.2, ISO 8735) of the centre support (pos. 1.1) into the corresponding bore in the manifold frame plate (pos. 52).
2. Slide the centre support (pos. 1.1) over the locating pin (pos. 1.2).
3. Insert the dowel pin (pos. 1.3, lock against rotation, ISO 8735) into the bore.
4. Install tilting preventing pad (pos. 12) in the manifold by using the socket head screw (pos. 12,1, ISO 4762 - 12.9).
5. Align the connection cables of the manifold (pos. 1) to prevent squeezing when the manifold is installed.
6. Insert the manifold (pos. 1) carefully into the manifold frame plate (pos. 52). Pay attention to the position of the locating pin (pos. 1.2) and the lock against rotation (pos. 1.3).
7. Place the connection cables in the cable channels and mark them according to their function (power / thermocouple) and position in the mould.

Manifold installation - installation of clamping plate and locating ring

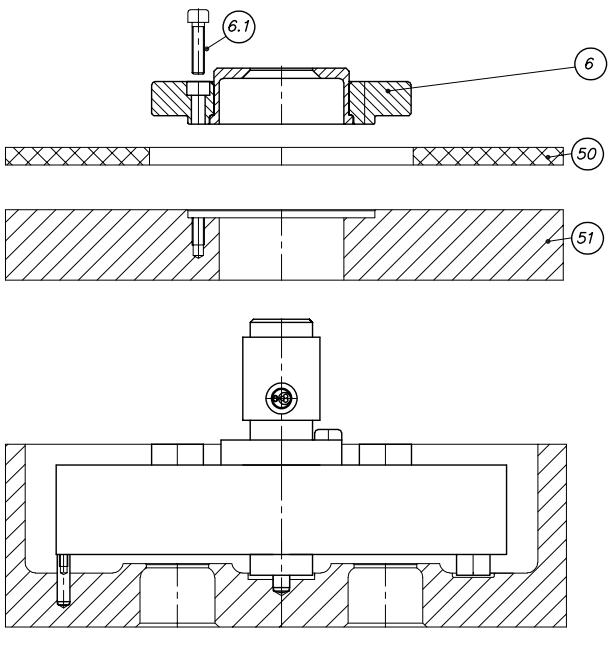

Picture 39: Installation of clamping plate and locating ring

HAZARD!

Connected power supply during installation

Risk of deadly electric shock or severe injuries due to live components.

- The hot runner system and the mould have to be disconnected from the voltage source during installation.

WARNING!

Sharp edges and heavy components

- Cut injuries to body and extremities, mainly to the hands.
- Crushing of fingers or hand.

Control of live components before installation

The electrical equipment of the hot runner system should be checked, especially those areas which will no longer be accessible after installation. Physical injuries such as an electric shock can be prevented that way.

Please check

- if cables are kinked or squeezed.
- if cable insulations are undamaged.

1. Install the clamping plate (pos. 51) and the insulating plate (pos. 50).
2. Install the locating ring (pos. 6) and fix it with socket head screws (pos. 6.1, ISO 4762 - 12.9). Tighten with matching torque. See chapter „9. Tightening torques“.
3. Wire the manifold according to the wiring scheme. Please pay attention to the notes in chapter „5.7 Electrical connection of hot runner systems“.
4. In order to clearly identify the hot runner system attach the type plate included in the delivery prominently to the operator side of the mould.

Check of clearance ΔS_1

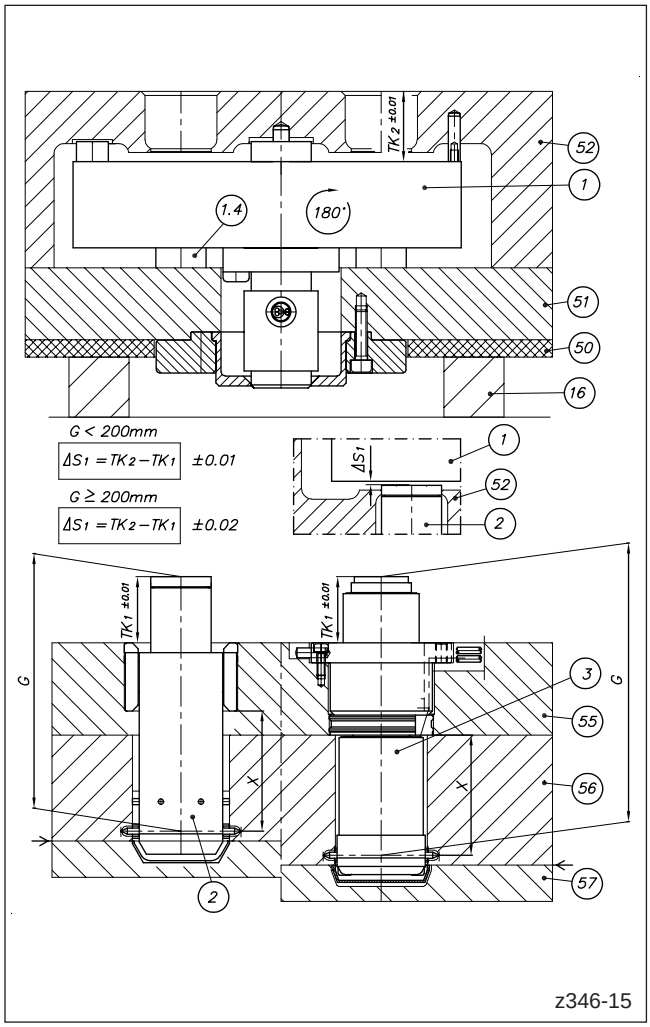

Picture 40: Check of clearance ΔS_1

HAZARD!

Connected power supply during installation

Risk of deadly electric shock or severe injuries due to live components.

- The hot runner system and the mould have to be disconnected from the voltage source during installation.

WARNING!

Sharp edges and heavy components

- Cut injuries to body and extremities, mainly to the hands.
- Crushing of fingers or hand.

Control of live components before installation

The electrical equipment of the hot runner system should be checked, especially those areas which will no longer be accessible after installation. Physical injuries such as an electric shock can be prevented that way.

Please check

- if cables are kinked or squeezed.
- if cable insulations are undamaged.

NOTE!

All clearances must be checked in cold condition!

In case of deviatons the clearances must be adjusted in an appropriate way (e.g. by machining the nozzle retainer frame plate or the pressure pads of the manifold).

Attention: The adjustment must not have influence on the dimension X of the nozzle!

1. Turn the installed manifold system by 180° so that the manifold rests on the upper pressure pads (pos. 1.4). Protect the locating ring by using appropriate supports (pos. 16). Measure the reference dimension **T_{K2}** between the lower surface of the manifold frame plate and the manifold.
2. At the already installed nozzles measure the reference dimension **T_{K1}** between the contact surface of the nozzle adapter and the upper surface of the nozzle retainer plate.

   The clearance ΔS_1 is

   $$\Delta S_1 = T_{K2} - T_{K1}$$

   Tolerance: ± 0,01 mm;
   ± 0,02 mm for dimension G of nozzle ≥ 200 mm

   Compare the calculated clearance to the value given in the drawing provided by EWIKON.

Final installation of the system

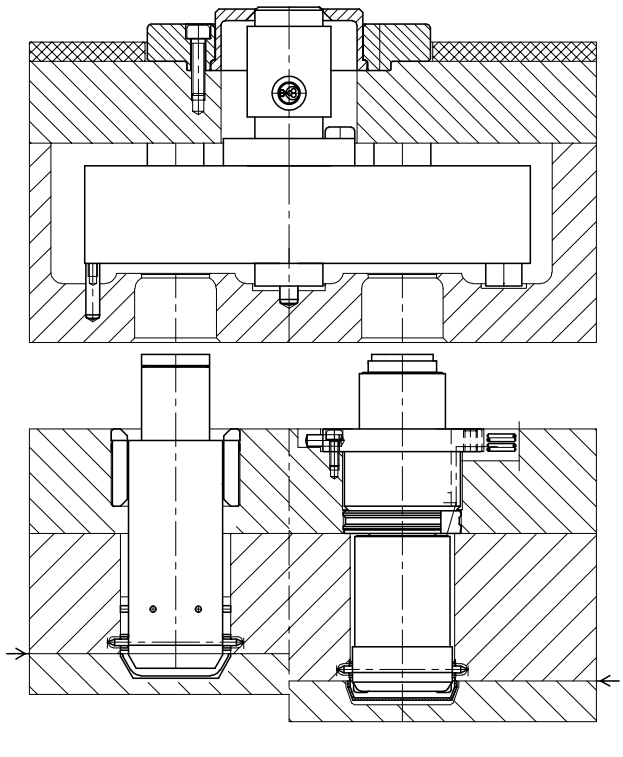

Picture 41: Final installation of system

HAZARD!

Connected power supply during installation

Risk of deadly electric shock or severe injuries due to live components.

- The hot runner system and the mould have to be disconnected from the voltage source during installation.

WARNING!

Sharp edges and heavy components

- Cut injuries to body and extremities, mainly to the hands.
- Crushing of fingers or hand.

Control of live components before installation

The electrical equipment of the hot runner system should be checked, especially those areas which will no longer be accessible after installation. Physical injuries such as an electric shock can be prevented that way.

Please check

- if cables are kinked or squeezed.
- if cable insulations are undamaged.

After checking all relevant dimensions screw-connect the plate assemblies for the manifold system and the HPS III-MH100/200 nozzles.

5.6.2 Installation of systems with HPS III-MHR111 nozzles

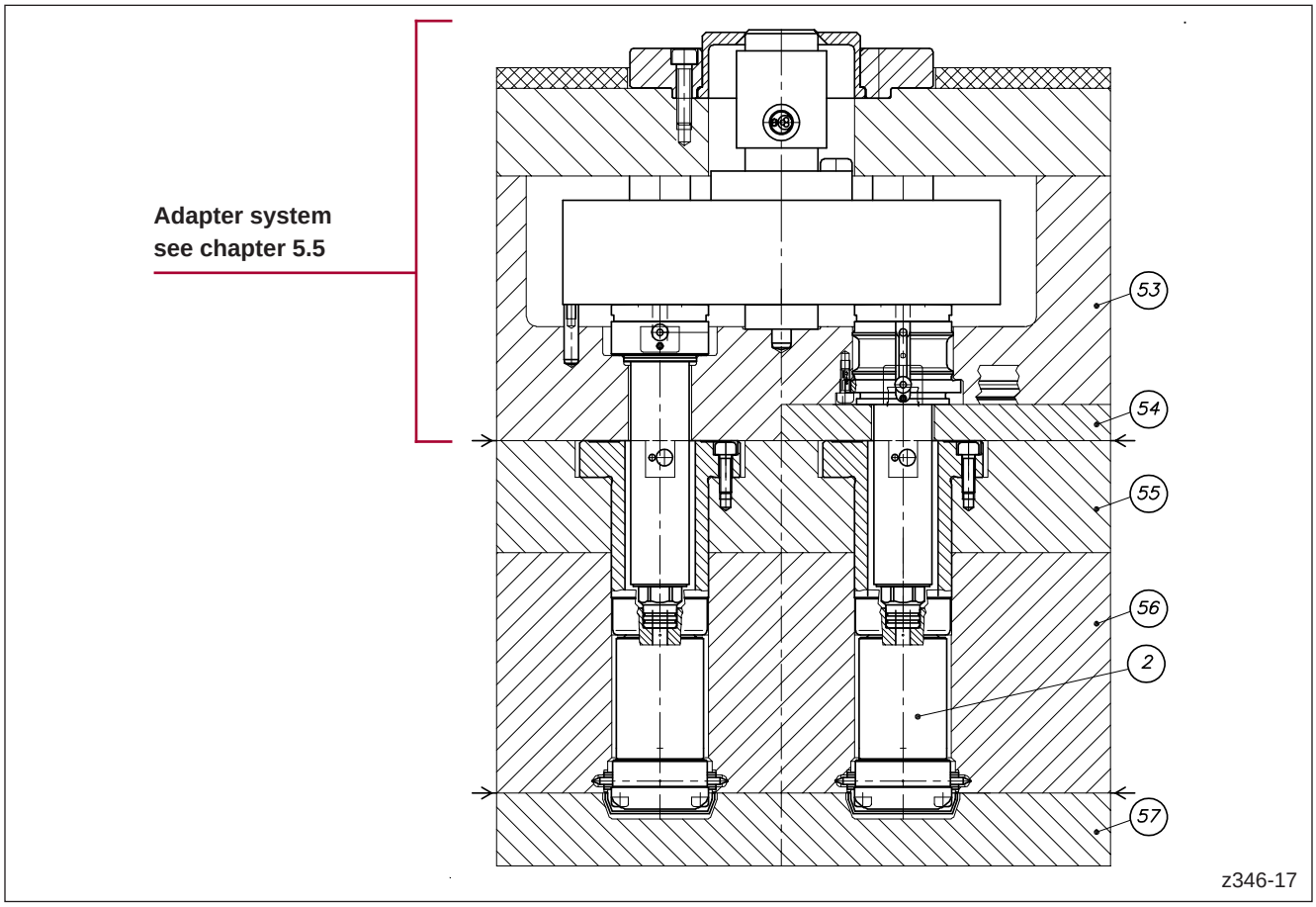

Picture 42: General layout of a system with HPS III-MHR111 nozzles

Pos. 2 HPS III-MHR111 nozzle

Pos. 53 Nozzle retainer frame plate

Pos. 54 Intermediate plate

Pos. 55 Nozzle retainer plate

Pos. 56 Contour plate (fixed mould half)

Pos. 57 Contour plate (moving mould half)

NOTE!

Read operating manual

In the installation process described in the following hazards for the personal health are listed explicitly.

Furthermore, during installation the warning, safety and installation notes for installation of EWIKON hot runner systems and components as specified in chapter „5.2 General safety instructions“ must be followed!

NOTE!

Please make sure that before each installation or deinstallation of a HPS III-MH nozzle the tip inserts are deinstalled! A HPS III-MH nozzle is always delivered with deinstalled tip inserts. The tip inserts are separately packed and included in the delivery.

NOTE!

Dimensional check

Before installation the installation dimensions as listed in chapter „5.4 Checks before installation“ must be checked and compared with the values provided with the installation drawing.

Use approved standard parts only

Only standard parts which are approved for use in EWIKON hot runner systems must be used. See chapter „5.3 Technical Requirements“.

HPS III-MHR111 nozzle - installation of nozzle body

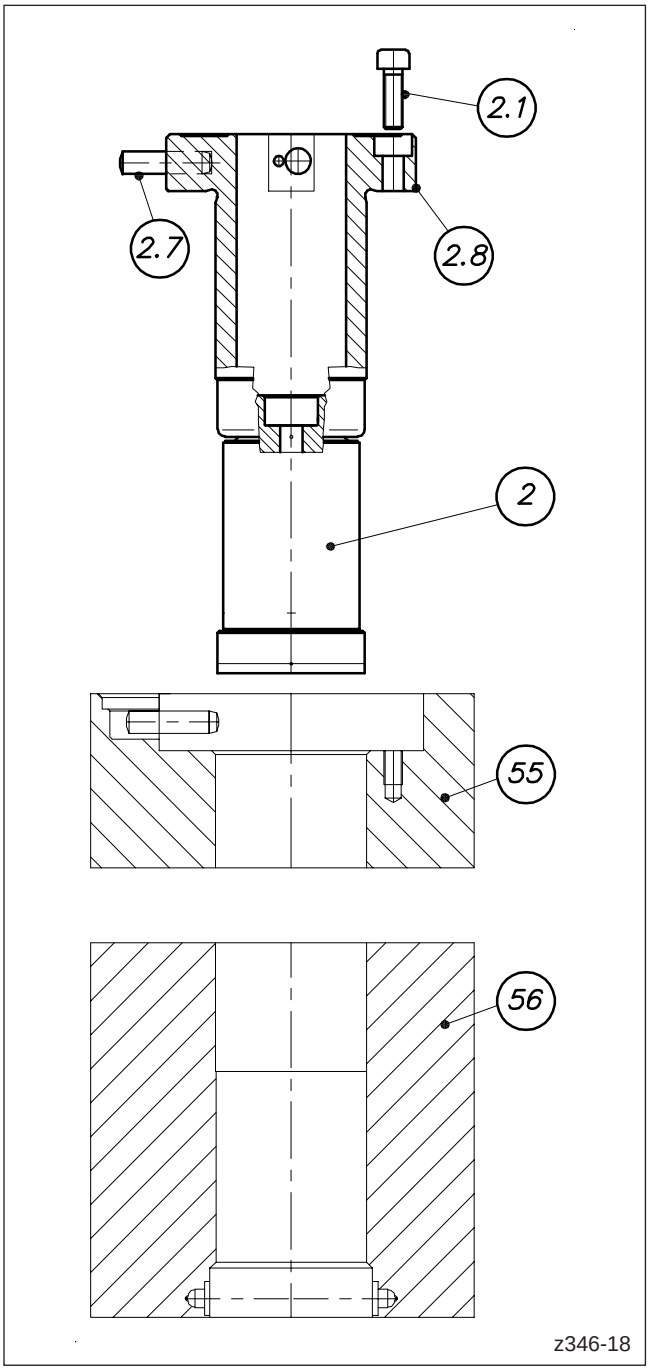

Picture 43: Installation of nozzle body

HAZARD!

Connected power supply during installation

Risk of deadly electric shock or severe injuries due to live components.

- The hot runner system and the mould have to be disconnected from the voltage source during installation.

WARNING!

Sharp edges and heavy components

- Cut injuries to body and extremities, mainly to the hands.
- Crushing of fingers or hand.

Control of live components before installation

The electrical equipment of the hot runner system should be checked, especially those areas which will no longer be accessible after installation. Physical injuries such as an electric shock can be prevented that way.

Please check

- if cables are kinked or squeezed.
- if cable insulations are undamaged.

1. Insert the nozzle body (pos. 2) carefully and without tilting into the nozzle retainer plate (pos. 55), until the retainer ring (pos. 2.8) reaches the end stop.
   Pay attention to the correct positioning of the dowel pin (pos. 2.7, ISO 2338-A, lock against rotation) in the retainer ring (pos. 2.8). It must fit into the corresponding cutout in the nozzle retainer plate.
   At the same time carefully bend the connection cables of the nozzle according to the position of the cable channels. The minimum bending radius is 15 mm. The connection cables can only be bended once.
2. Place the connection cables in the cable channels and mark them according to their function (power / thermocouple) and position in the mould.
3. Insert the socket head screws (pos. 2.1, ISO 4762 - min. 8.8) from the back through the bores in the retainer ring and screw them in up to the stop. Tighten with matching torque. See chapter „9.2 Tightening torques for manifold screw connections and retaining screws“.
4. Wire the nozzle according to the wiring scheme. Please pay attention to the notes in chapter „5.7 Electrical connection of hot runner systems“.

HPS III-MHR111 nozzle - installation of tip inserts

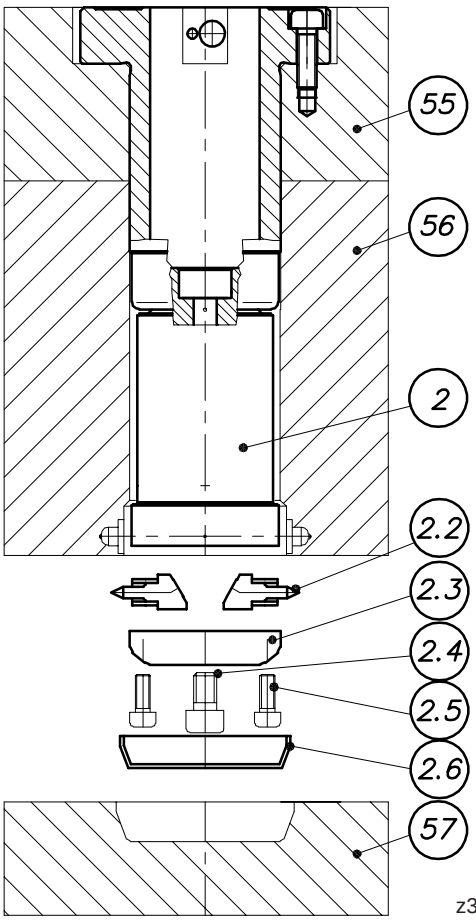

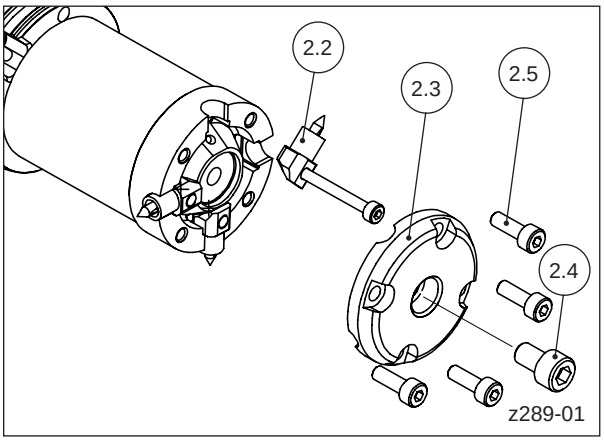

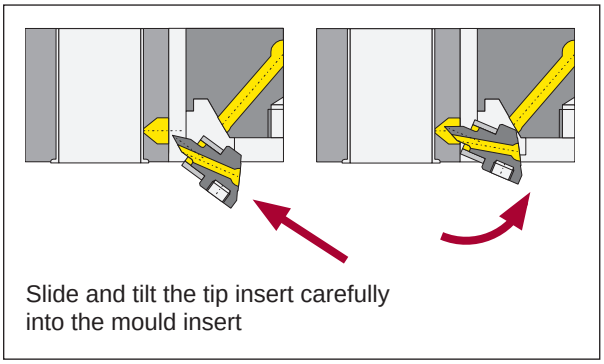

Picture 44: Installation of tip inserts

WARNING!

Hot surfaces

Burns to the body caused by hot surfaces.

1. Install tip inserts (pos. 2.2). Ensure that they are positioned correctly and that the sealing surfaces between tip insert and nozzle are clean. A screw M4 or a threaded rod can be screwed into the tip insert as an assembly aid.
2. Attach clamping cover (pos. 2.3) and fix it with the central socket head screw M6 (pos. 2.4, ISO 4762 - 12.9). Tighten with half of the matching tightening torque (please see point 5).
3. Screw in socket head screws M4 (pos. 2.5, ISO 4762 - 12.9) crosswise. Tighten with half of the matching tightening torque (please see point 6).
4. Heat up nozzle to processing temperature (maximum nozzle temperature 350°C) and warm up the mould until the mould temperature is reached. Keep the resulting ΔT (difference between processing and mould temperature) for at least 10 minutes before finally retightening the screws with the matching torque. Not adhering to this procedure can result in damaged sealing sleeves and leakage.
5. Retighten central socket head screw M6 (pos. 2.4, ISO 4762 - 12.9) with the matching torque. The torque value is engraved on the clamping cover (Pos 2.3).
   Also see chapter „9.3 Tightening torques for clamping covers of HPS III-MH nozzles“.
6. Retighten socket head screws M4 (pos. 2.5, ISO 4762 - 12.9) crosswise with the matching torque. The torque value is engraved on the clamping cover (Pos 2.3).
   Also see chapter „9.3 Tightening torques for clamping covers of HPS III-MH nozzles“.
7. Install heat protective cover (pos. 2.6, provided by the customer).

Check of clearance ΔSu

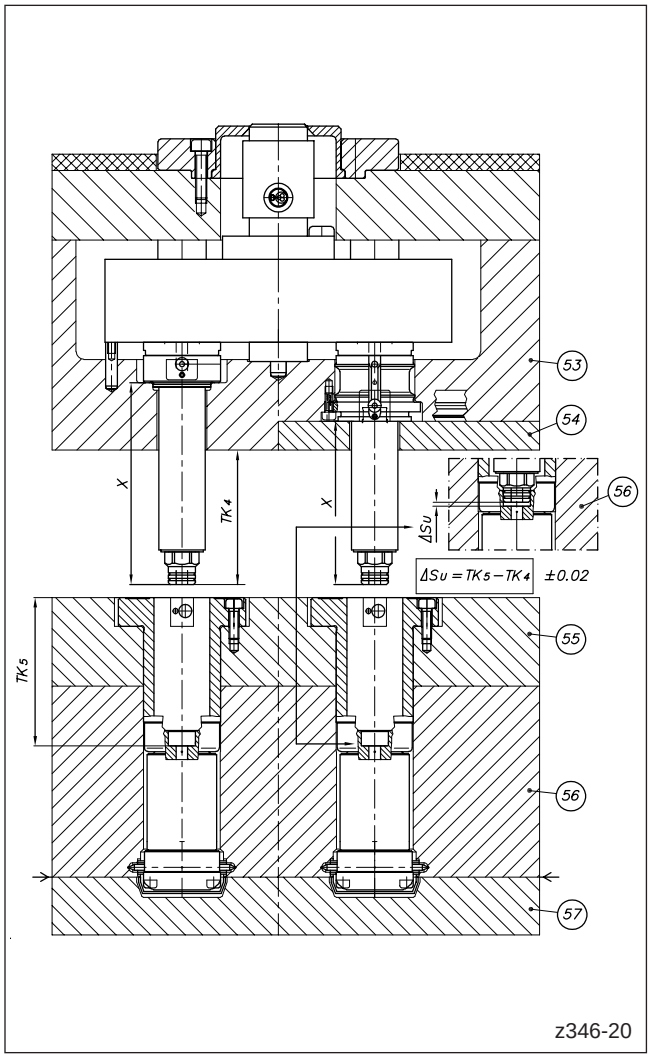

Picture 45: Check of clearance ΔS_U

HAZARD!

Connected power supply during installation

Risk of deadly electric shock or severe injuries due to live components.

- The hot runner system and the mould have to be disconnected from the voltage source during installation.

WARNING!

Sharp edges and heavy components

- Cut injuries to body and extremities, mainly to the hands.
- Crushing of fingers or hand.

Hot surfaces

Burns to the body caused by hot surfaces.

NOTE!

All clearances must be checked in cold condition!

In case of deviatons the clearances must be adjusted in an appropriate way (e.g. by machining the nozzle retainer frame plate or by special adjustments of the nozzle seats).

Attention: The adjustment must not have influence on the dimension X of the adapter nozzle!

1. Position the already installed adapter system with the nozzles pointing in downward direction. Measure the reference dimension $\mathbf{T_{K4}}$ from the lower surface of the nozzle retainer frame plate (pos. 53) / intermediate plate (pos. 54) to the contact surface (sealing surface) of the adapter nozzle. To ensure that the adapter nozzle is positioned correctly in the nozzle retainer frame plate (pos. 53) the manifold must be heated to 120 - 150 °C (248 - 302 °F). After that the reference dimension must be measured immediately.
2. At the already installed HPS III-MH111 nozzles measure the reference dimension $\mathbf{T_{K5}}$ from the surface of the nozzle retainer plate (pos. 55) to the contact surface (sealing surface) in the MH nozzle.

   The clearance **ΔSu** is

   $$\Delta S_U = T_{K5} - T_{K4}$$

   Compare the calculated clearance to the value given in the drawing provided by EWIKON.

HPS III-MHR111 nozzle - final installation of plate assemblies

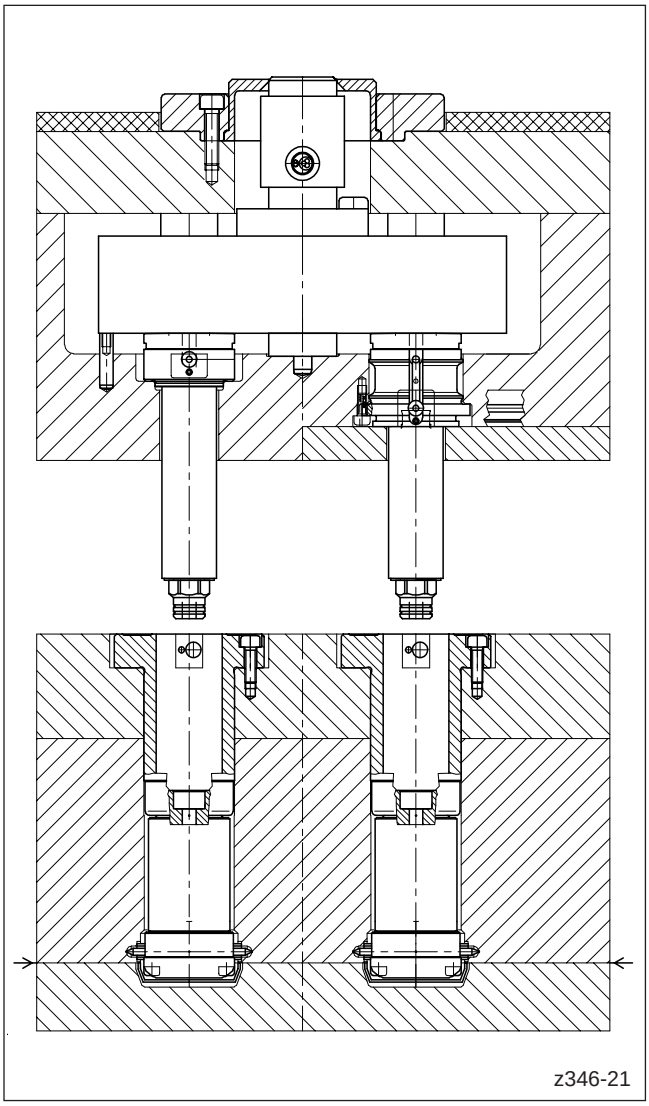

Picture 46: Final installation of plate assemblies

HAZARD!

Connected power supply during installation

Risk of deadly electric shock or severe injuries due to live components.

- The hot runner system and the mould have to be disconnected from the voltage source during installation.

WARNING!

Sharp edges and heavy components

- Cut injuries to body and extremities, mainly to the hands.
- Crushing of fingers or hand.

Control of live components before installation

The electrical equipment of the hot runner system should be checked, especially those areas which will no longer be accessible after installation. Physical injuries such as an electric shock can be prevented that way.

Please check

- if cables are kinked or squeezed.
- if cable insulations are undamaged.

1. After checking all relevant dimensions connect the mould plate assemblies for the adapter system and the HPS III-MH111 nozzles and screw them together.
2. In order to clearly identify the hot runner system attach the type plate included in the delivery prominently to the operator side of the mould.

5.6.3 Installation of systems with HPS III-MHR112 nozzles

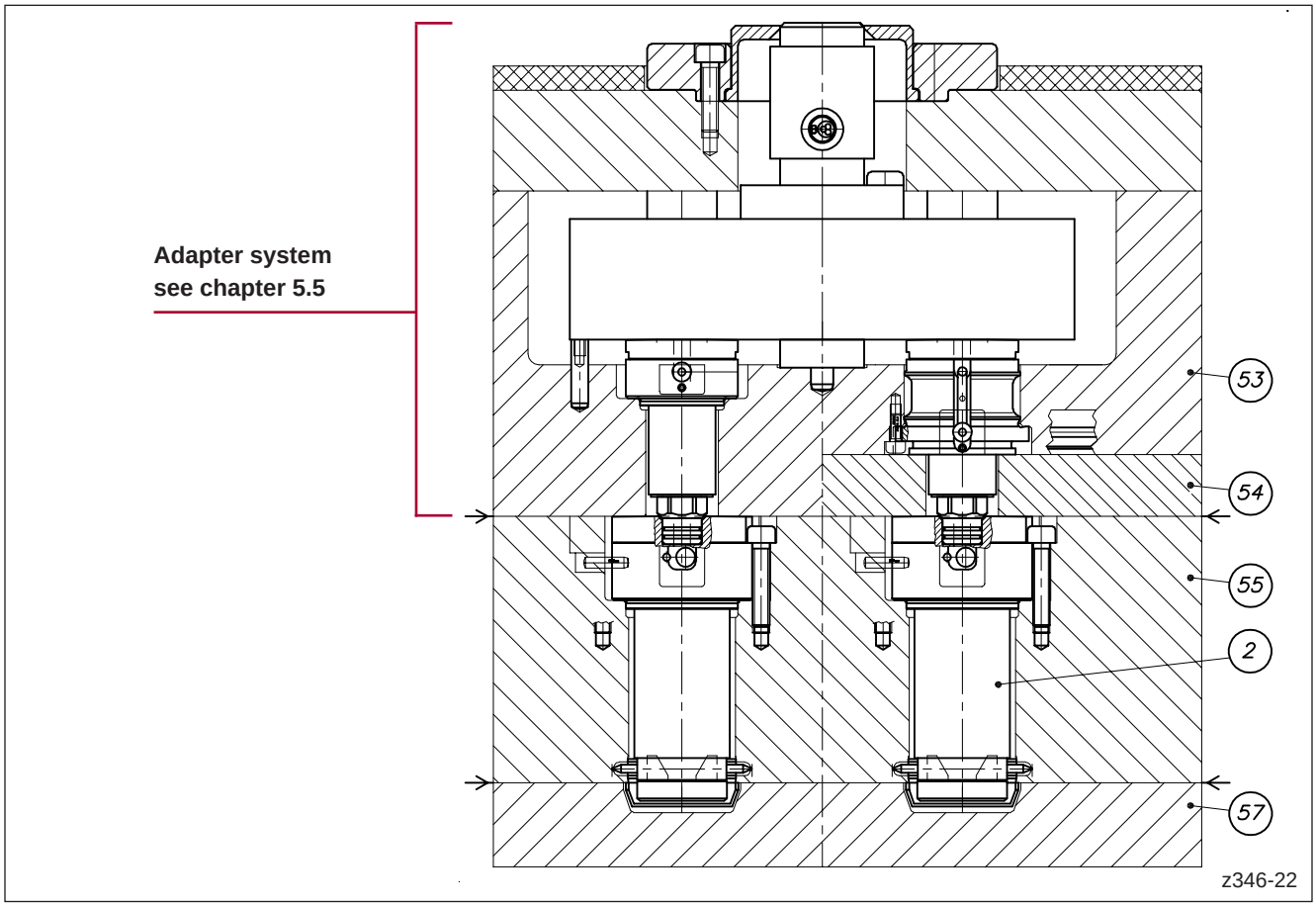

Picture 47: General layout of a system with HPS III-MHR112 nozzles

Pos. 2 HPS III-MHR112 nozzle

Pos. 53 Nozzle retainer frame plate

Pos. 54 Intermediate plate

Pos. 55 Nozzle retainer plate

Pos. 57 Contour plate (moving mould half)

NOTE!

Read operating manual

In the installation process described in the following hazards for the personal health are listed explicitly.

Furthermore, during installation the warning, safety and installation notes for installation of EWIKON hot runner systems and components as specified in chapter „5.2 General safety instructions“ must be followed!

NOTE!

Please make sure that before each installation or deinstallation of a HPS III-MH nozzle the tip inserts are deinstalled! A HPS III-MH nozzle is always delivered with deinstalled tip inserts. The tip inserts are separately packed and included in the delivery.

NOTE!

Dimensional check

Before installation the installation dimensions as listed in chapter „5.4 Checks before installation“ must be checked and compared with the values provided with the installation drawing.

Use approved standard parts only

Only standard parts which are approved for use in EWIKON hot runner systems must be used. See chapter „5.3 Technical Requirements“.

HPS III-MHR112 nozzle - installation of nozzle body

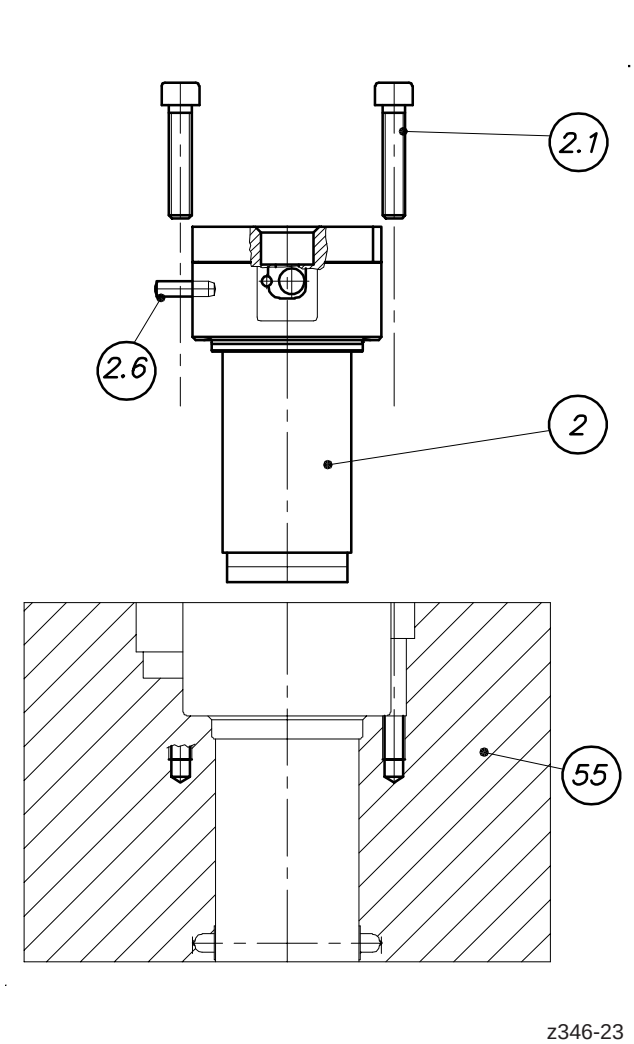

Picture 48: Installation of nozzle body

HAZARD!

Connected power supply during installation

Risk of deadly electric shock or severe injuries due to live components.

- The hot runner system and the mould have to be disconnected from the voltage source during installation.

WARNING!

Sharp edges and heavy components

- Cut injuries to body and extremities, mainly to the hands.
- Crushing of fingers or hand.

Control of live components before installation

The electrical equipment of the hot runner system should be checked, especially those areas which will no longer be accessible after installation. Physical injuries such as an electric shock can be prevented that way.

Please check

- if cables are kinked or squeezed.
- if cable insulations are undamaged.

1. Insert the nozzle body (pos. 2) carefully and without tilting into the nozzle retainer plate (pos. 55). Pay attention to the correct positioning of the dowel pin (pos. 2.6, ISO 2338-A, lock against rotation) in the nozzle body. It must fit into the corresponding cutout in the nozzle retainer plate.
   At the same time carefully bend the connection cables of the nozzle according to the position of the cable channels. The minimum bending radius is 15 mm. The connection cables can only be bended once.
2. Place the connection cables in the cable channels and mark them according to their function (power / thermocouple) and position in the mould.
3. Screw the socket head screws (pos. 2.1, ISO 4762 - min. 8.8) in up to the stop, to avoid inclination of the nozzle during installation. Then tighten with matching torque. See chapter „9.2 Tightening torques for manifold screw connections and retaining screws“.
4. Wire the nozzle according to the wiring scheme. Please pay attention to the notes in chapter
   „5.7 Electrical connection of hot runner systems“.

HPS III-MHR112 nozzle - installation of tip inserts

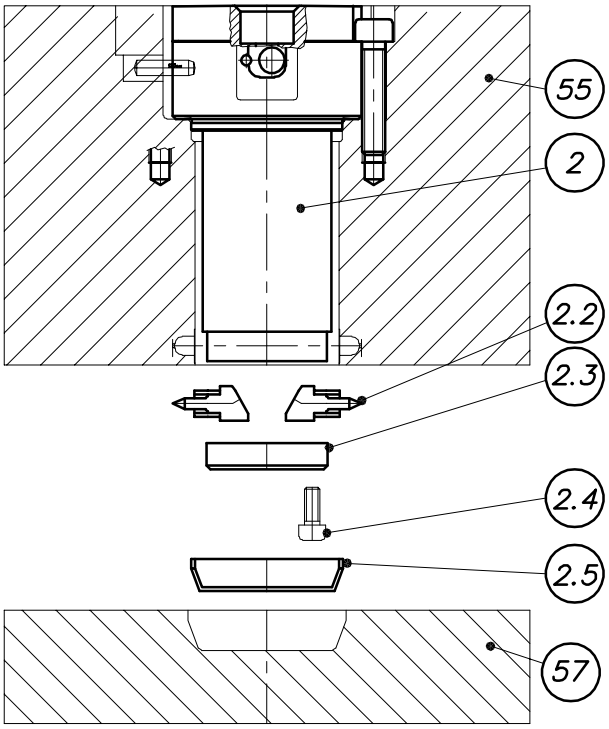

z346-24

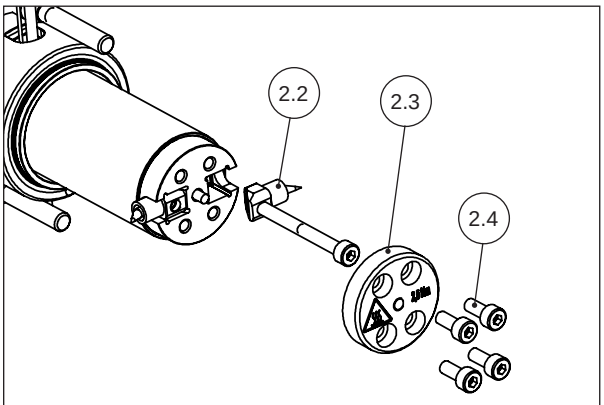

z289-03

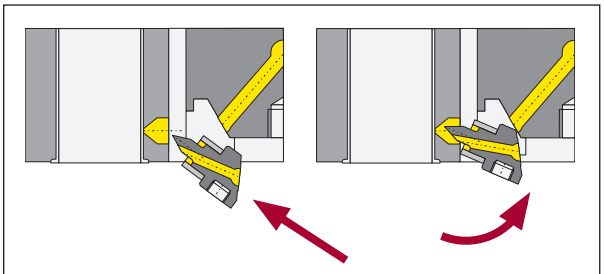

Slide and tilt the tip insert carefully into the mould insert

Picture 49: Installation of tip inserts

WARNING!

Hot surfaces

Burns to the body caused by hot surfaces.

1. Install tip inserts (pos. 2.2). Ensure that they are positioned correctly and that the sealing surfaces between tip insert and nozzle are clean. A screw M4 or a threaded rod can be screwed into the tip insert as an assembly aid.
2. Attach clamping cover (pos. 2.3) and screw in head socket screws M4 (pos. 2.4, ISO 4762 - 12.9) crosswise. Tighten with half of the matching tightening torque (please see point 4).
3. Heat up nozzle to processing temperature (maximum nozzle temperature 350°C) and warm up the mould until the mould temperature is reached. Keep the resulting ΔT (difference between processing and mould temperature) for at least 10 minutes before finally retightening the screws with the matching torque. Not adhering to this procedure can result in damaged sealing sleeves and leakage.
4. Retighten socket head screws M4 (pos. 2.4, ISO 4762 - 12.9) crosswise with the matching torque. The torque value is engraved on the clamping cover (pos. 2.3). Also see chapter „9.3 Tightening torques for clamping covers of HPS III-MH nozzles“.
5. Install heat protective cover (pos. 2.5, provided by the customer).

Check of clearance ΔSU

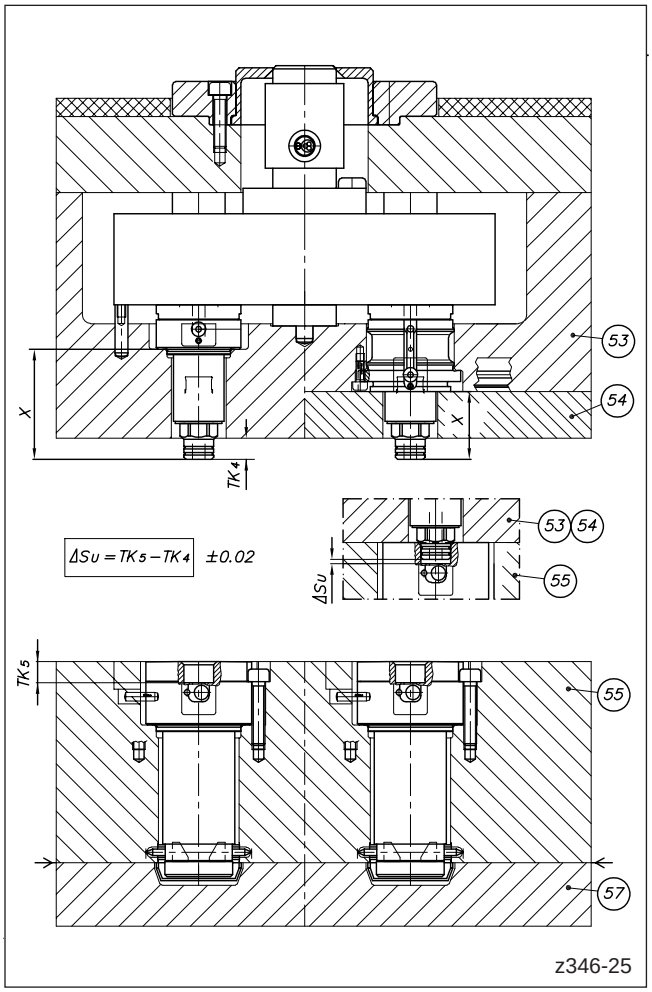

Picture 50: Check of clearance ΔS_U

HAZARD!

Connected power supply during installation

Risk of deadly electric shock or severe injuries due to live components.

- The hot runner system and the mould have to be disconnected from the voltage source during installation.

WARNING!

Sharp edges and heavy components

- Cut injuries to body and extremities, mainly to the hands.
- Crushing of fingers or hand.

Hot surfaces

Burns to the body caused by hot surfaces.

NOTE!

All clearances must be checked in cold condition!

In case of deviatons the clearances must be adjusted in an appropriate way (e.g. by machining the nozzle retainer frame plate or by special adjustments of the nozzle seats).

Attention: The adjustment must not have influence on the dimension X of the adapter nozzle!

1. Position the already installed adapter system with the nozzles pointing in downward direction. Measure the reference dimension $\mathbf{T_{K4}}$ from the lower surface of the nozzle retainer frame plate (pos. 53) / intermediate plate (pos. 54) to the contact surface (sealing surface) of the adapter nozzle. To ensure that the adapter nozzle is positioned correctly in the nozzle retainer frame plate (pos. 53) the manifold must be heated to 120 - 150 °C (248 - 302 °F). After that the reference dimension must be measured immediately.
2. At the already installed HPS III-MH112 nozzles measure the reference dimension $\mathbf{T_{K5}}$ from the surface of the nozzle retainer plate (pos. 55) to the contact surface (sealing surface) in the MH nozzle.

   The clearance $\Delta \mathbf{S_U}$ is

   $$\Delta S_U = T_{K5} - T_{K4}$$

   Compare the calculated clearance to the value given in the drawing provided by EWIKON.

HPS III-MHR112 nozzle - final installation of plate assemblies

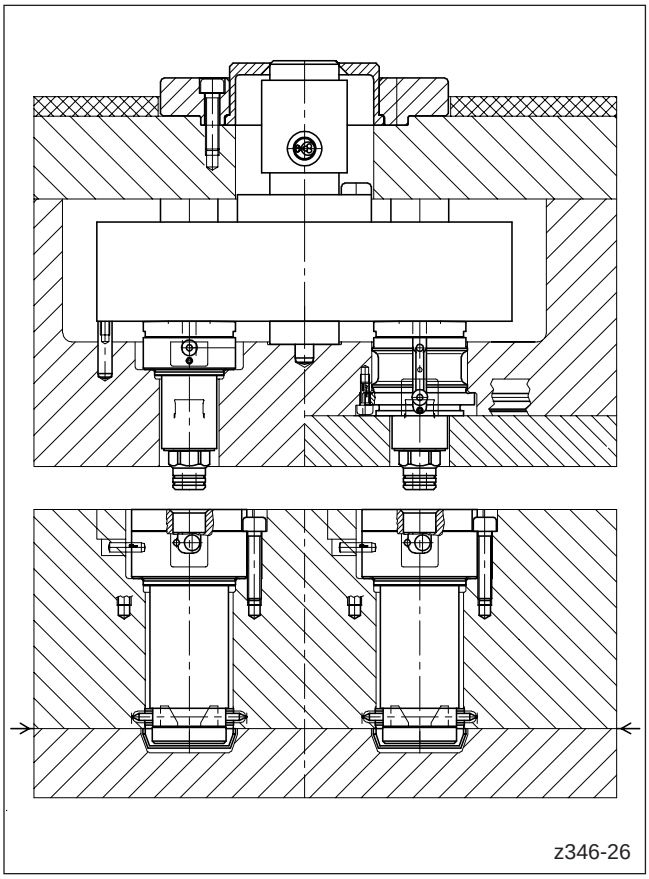

Picture 51: Final installation of plate assemblies

HAZARD!

Connected power supply during installation

Risk of deadly electric shock or severe injuries due to live components.

- The hot runner system and the mould have to be disconnected from the voltage source during installation.

WARNING!

Sharp edges and heavy components

- Cut injuries to body and extremities, mainly to the hands.
- Crushing of fingers or hand.

Control of live components before installation

The electrical equipment of the hot runner system should be checked, especially those areas which will no longer be accessible after installation. Physical injuries such as an electric shock can be prevented that way.

Please check

- if cables are kinked or squeezed.
- if cable insulations are undamaged.

1. After checking all relevant dimensions connect the mould plate assemblies for the adapter system and the HPS III-MH112 nozzles and screw them together.
2. In order to clearly identify the hot runner system attach the type plate included in the delivery prominently to the operator side of the mould.

5.6.4 Installation of systems with HPS III-MHR122 nozzles

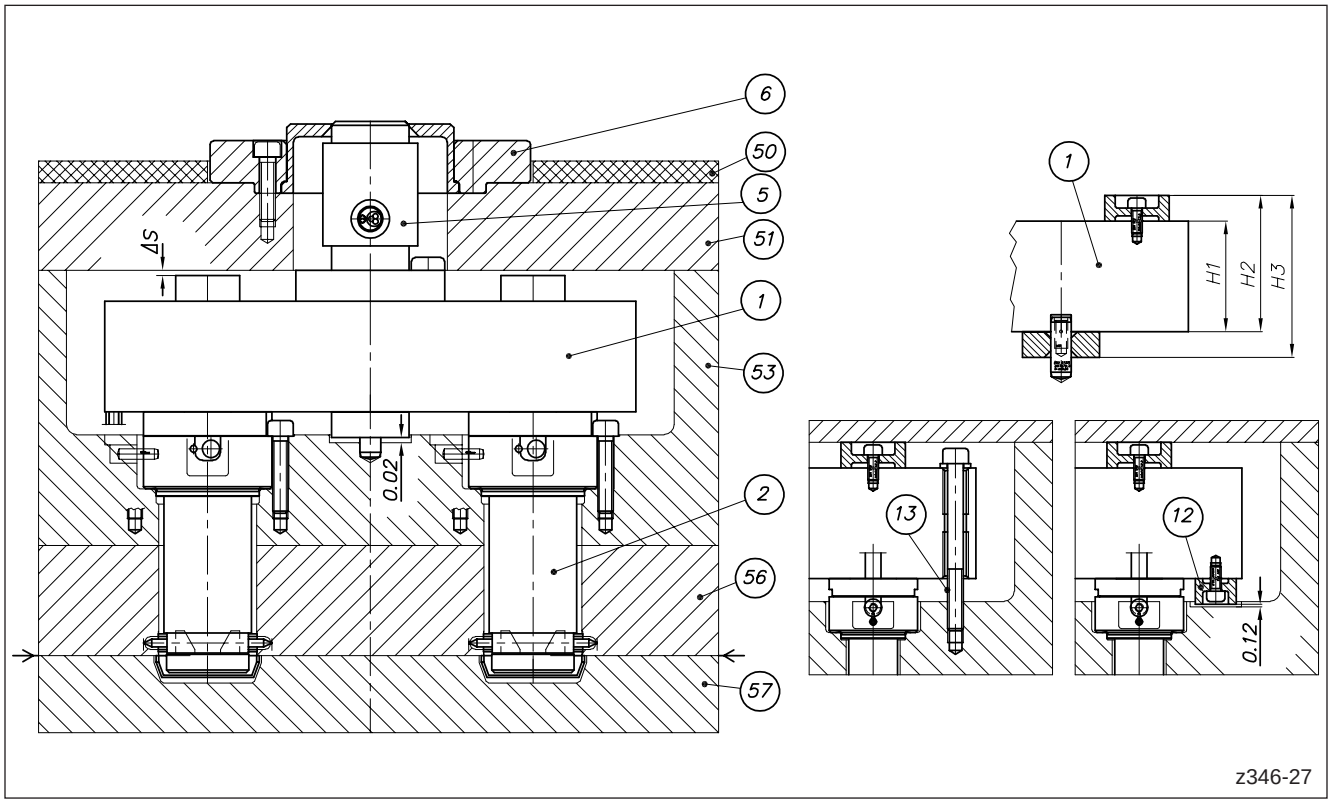

Picture 52: General layout of a system with HPS III-MHR122 nozzles

Pos. 1 Manifold

Pos. 2 HPS III-MHL122 nozzle

Pos. 5 Sprue bush

Pos. 6 Locating ring

Pos. 12 Tilting preventing pad (depending on order)

Pos. 13 Screw connection for manifold

Pos. 50 Insulating plate

Pos. 51 Clamping plate

Pos. 53 Nozzle retainer frame plate

Pos. 56 Contour plate (fixed mould half)

Pos. 57 Contour plate (moving mould half)

NOTE!

Read operating manual

In the installation process described in the following hazards for the personal health are listed explicitly.

Furthermore, during installation the warning, safety and installation notes for installation of EWIKON hot runner systems and components as specified in chapter „5.2 General safety instructions“ must be followed!

NOTE!

Please make sure that before each installation or deinstallation of a HPS III-MH nozzle the tip inserts are deinstalled! A HPS III-MH nozzle is always delivered with deinstalled tip inserts. The tip inserts are separately packed and included in the delivery.

NOTE!

Dimensional check

Before installation the installation dimensions as listed in chapter „5.4 Checks before installation“ must be checked and compared with the values provided with the installation drawing.

Use approved standard parts only

Only standard parts which are approved for use in EWIKON hot runner systems must be used. See chapter „5.3 Technical Requirements“.

HPS III-MHR122 nozzle - installation of nozzle body

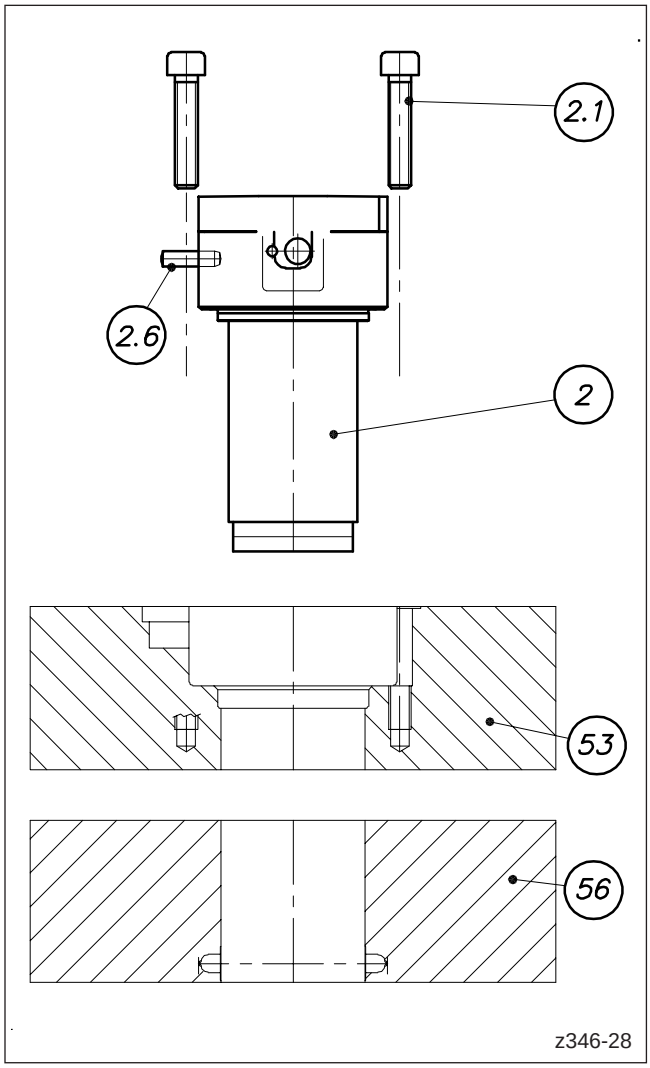

Picture 53: Installation of nozzle body

HAZARD!

Connected power supply during installation

Risk of deadly electric shock or severe injuries due to live components.

- The hot runner system and the mould have to be disconnected from the voltage source during installation.

WARNING!

Sharp edges and heavy components

- Cut injuries to body and extremities, mainly to the hands.
- Crushing of fingers or hand.

Control of live components before installation

The electrical equipment of the hot runner system should be checked, especially those areas which will no longer be accessible after installation. Physical injuries such as an electric shock can be prevented that way.

Please check

- if cables are kinked or squeezed.
- if cable insulations are undamaged.

1. Insert the nozzle body (pos. 2) carefully and without tilting into the nozzle retainer plate (pos. 53). Pay attention to the correct positioning of the dowel pin (pos. 2.6, ISO 2338-A, lock against rotation) in the nozzle body. It must fit into the corresponding cutout in the nozzle retainer plate.
   At the same time carefully bend the connection cables of the nozzle according to the position of the cable channels. The minimum bending radius is 15 mm. The connection cables can only be bended once.
2. Place the connection cables in the cable channels and mark them according to their function (power / thermocouple) and position in the mould.
3. Screw the socket head screws (pos. 2.1, ISO 4762 - min. 8.8) in up to the stop, to avoid inclination of the nozzle during installation. Then tighten with matching torque. See chapter „9.2 Tightening torques for manifold screw connections and retaining screws“.
4. Wire the nozzle according to the wiring scheme. Please pay attention to the notes in chapter
   „5.7 Electrical connection of hot runner systems“.

HPS III-MHR122 nozzle - installation of tip inserts

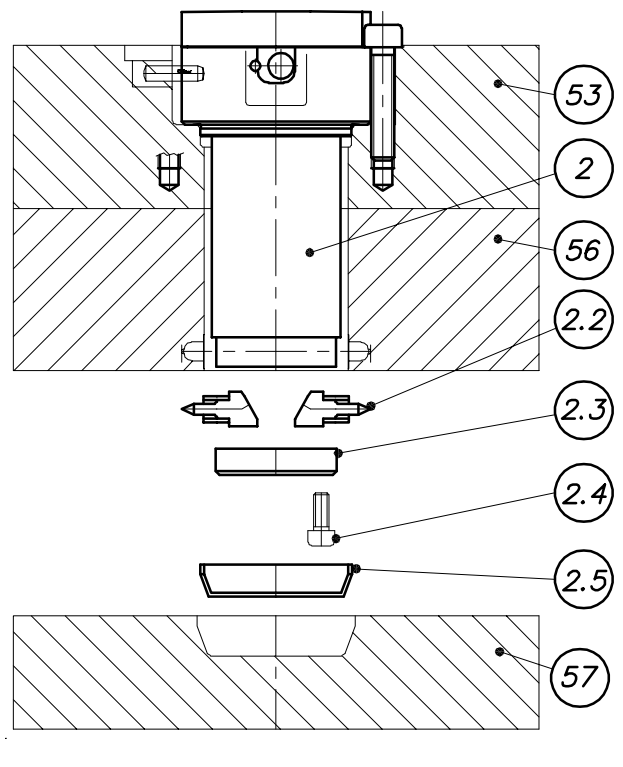

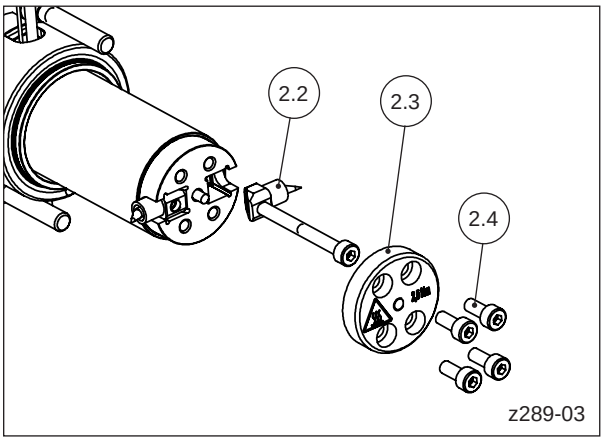

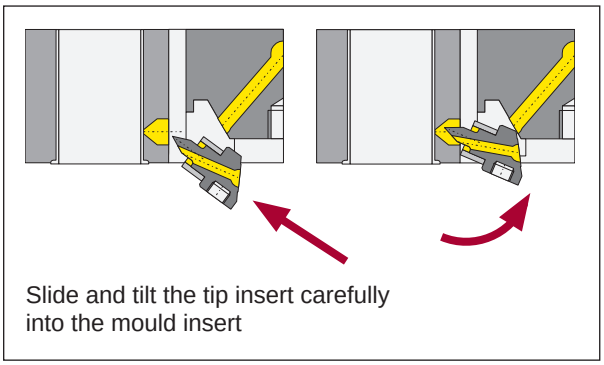

Picture 54: Installation of tip inserts

WARNING!

Hot surfaces

Burns to the body caused by hot surfaces.

1. Install tip inserts (pos. 2.2). Ensure that they are positioned correctly and that the sealing surfaces between tip insert and nozzle are clean. A screw M4 or a threaded rod can be screwed into the tip insert as an assembly aid.
2. Attach clamping cover (pos. 2.3) and screw in head socket screws M4 (pos. 2.4, ISO 4762 - 12.9) crosswise. Tighten with half of the matching tightening torque (please see point 4).
3. Heat up nozzle to processing temperature (maximum nozzle temperature 350°C) and warm up the mould until the mould temperature is reached. Keep the resulting ΔT (difference between processing and mould temperature) for at least 10 minutes before finally retightening the screws with the matching torque. Not adhering to this procedure can result in damaged sealing sleeves and leakage.
4. Retighten socket head screws M4 (pos. 2.4, ISO 4762 - 12.9) crosswise with the matching torque. The torque value is engraved on the clamping cover (pos. 2.3). Also see chapter „9.3 Tightening torques for clamping covers of HPS III-MH nozzles“.
5. Install heat protective cover (pos. 2.5, provided by the customer).

Manifold installation - preliminary measures

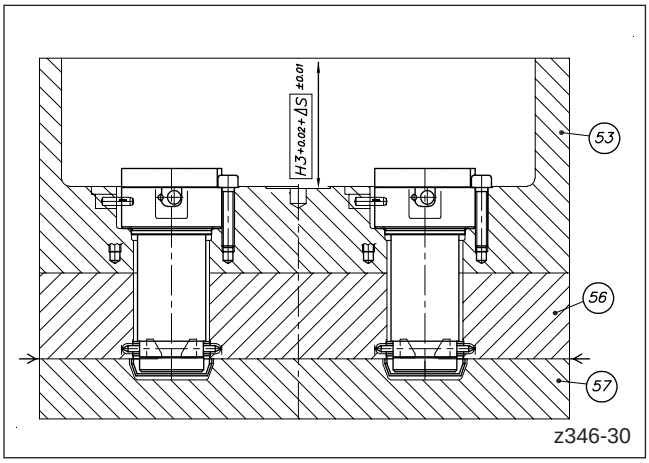

Picture 55: Check of reference dimensions before installation of manifold

After nozzle installation check the dimension **H3 + 0.02 + ΔS** between the upper surface of the nozzle retainer frame plate (pos. 53) and the contact surface for the centre support of the manifold and compare it to the value given in the drawing provided by EWIKON.

Installation of the sprue bush on the manifold

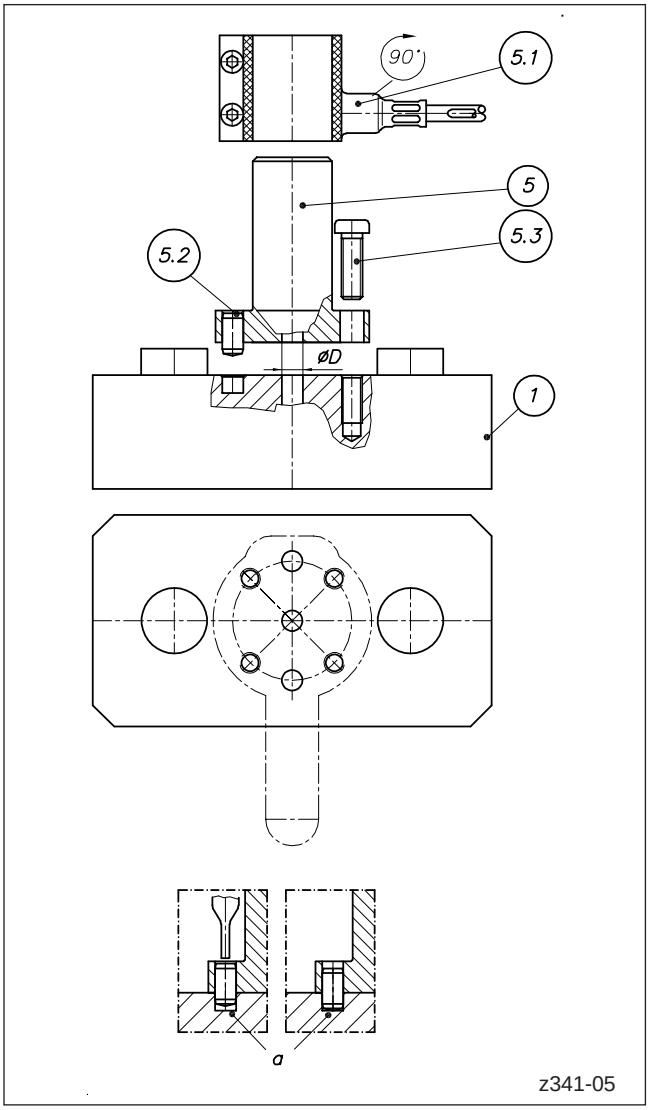

Picture 56: Installation of a sprue bush

NOTE!

The installation process described in the folllowing will only be required if a sprue bush is delivered as spare part.

A new manifold has the sprue bush pre-installed.

HAZARD!

Connected power supply during installation

Risk of deadly electric shock or severe injuries due to live components.

- The hot runner system and the mould have to be disconnected from the voltage source during installation.

1. The diameter D of the sprue bush (pos. 5) must be identical to the diameter of the flow channel entrance in the manifold (pos. 1).
2. Insert dowel pins (pos. 5.2, ISO 8735) through the bores in the sprue bush into the fit bores in the manifold (pos. 1).
3. Screw in the socket head screws with flat head (pos. 5.3, DIN 6912 - 10.9) crosswise and tighten with matching torque. See chapter „9. Tightening torques“.
4. Drive the dowel pins (pos. 5.2) to the end of the fit bores in the manifold by using a punch (pos. α). The front diameter of the punch should always be smaller than the tapped blind hole bore in the dowel pin in order not to damage the thread.
5. Install the heater band (pos. 5.1) approx. 5 mm above the socket head screws (pos. 5.3) and tighten it.

Manifold installation - installation procedure

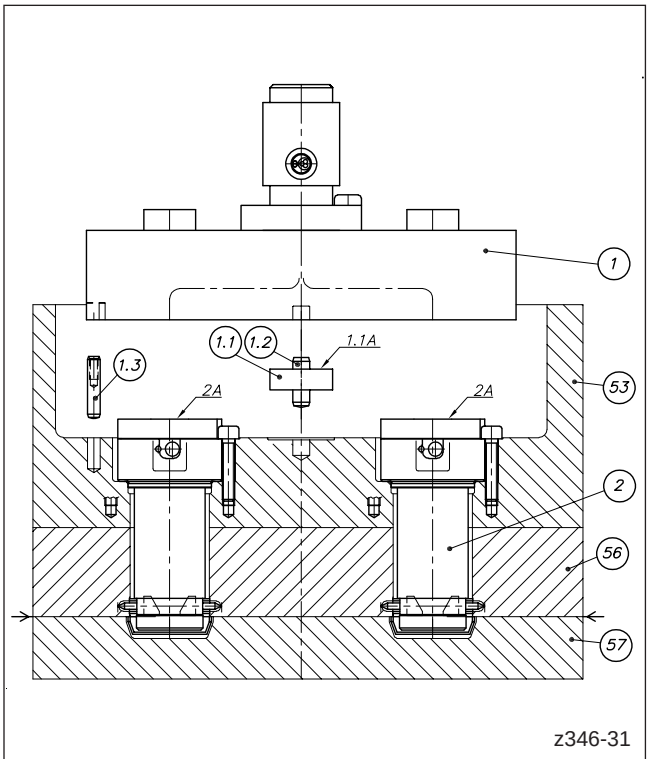

Picture 57: Installation of manifold for a HPS III hot runner system with HPS III-MHR122 nozzles for direct side gating

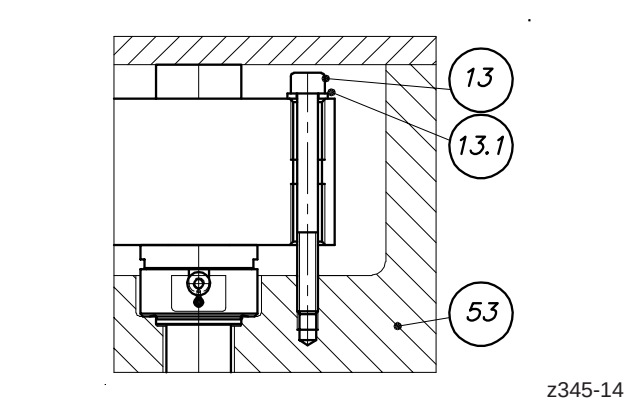

Picture 58: Screw connection for manifold with socket head screws

HAZARD!

Connected power supply during installation

Risk of deadly electric shock or severe injuries due to live components.

- The hot runner system and the mould have to be disconnected from the voltage source during installation.

WARNING!

Sharp edges and heavy components

- Cut injuries to body and extremities, mainly to the hands.
- Crushing of fingers or hand.

Control of live components before installation

The electrical equipment of the hot runner system should be checked, especially those areas which will no longer be accessible after installation. Physical injuries such as an electric shock can be prevented that way.

Please check

- if cables are kinked or squeezed.
- if cable insulations are undamaged.

1. Insert the locating pin (pos. 1.2, ISO 8735) of the centre support (pos. 1.1) into the corresponding bore in the nozzle retainer frame plate (pos. 53).
2. Slide the centre support (pos. 1.1) over the locating pin (pos. 1.2).
3. Insert the dowel pin (pos. 1.3, lock against rotation, ISO 8735) into the bore.
4. Apply a thin and even coat of engineer's blue to the faces of the nozzle heads (surfaces 2A) as well as to the face of the centre support (surface 1.1A) (see adjoining note).
5. Check the position of the connection cables of the nozzles (pos. 2) again and align the connection cables of the manifold (pos. 1) to prevent squeezing when the manifold is installed.
6. Insert the manifold (pos. 1) carefully into the nozzle retainer frame plate (pos. 53). Pay attention to the position of the locating pin (pos. 1.2) and the lock against rotation (pos. 1.3).
7. Remove the manifold again (pos. 1) and check the transfer of the blue. The surfaces 2A must show an even transfer of the blue. The surface 1.1A must show no transfer of the blue because it must have a distance of 0.02 mm to the manifold.
8. Clean all surfaces from engineer's blue and insert the manifold (pos. 1) again. Place the connection cables in the cable channels and mark them according to their function (power / thermocouple) and position in the mould.
9. Screw the manifold to the nozzle retainer frame plate (pos. 53) by using socket head screws (pos. 13, ISO 4762 - min. 8.8) and plain washers (pos. 13.1, ISO 7089). Screw the socket head screws in to the stop then tighten with matching torque. See chapter „9.2 Tightening torques for manifold screw connections and retaining screws“.

Manifold installation - check of clearance ΔS, installation of clamping plate and locating ring

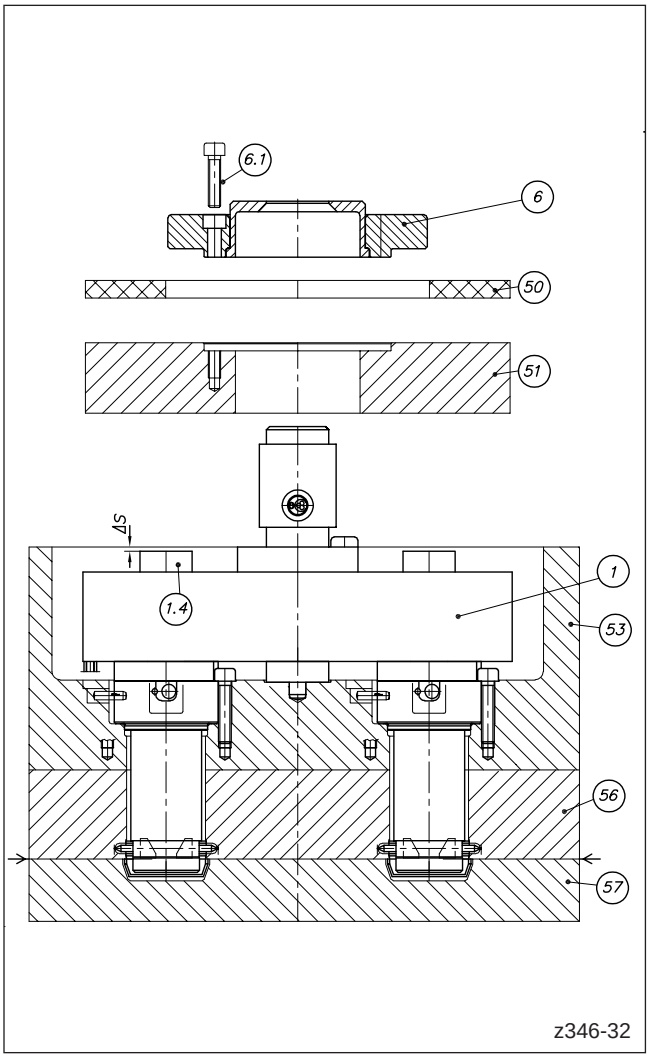

Picture 59: Check of clearance ΔS and subsequent installation steps

HAZARD!

Connected power supply during installation

Risk of deadly electric shock or severe injuries due to live components.

- The hot runner system and the mould have to be disconnected from the voltage source during installation.

WARNING!

Sharp edges and heavy components

- Cut injuries to body and extremities, mainly to the hands.
- Crushing of fingers or hand.

Control of live components before installation

The electrical equipment of the hot runner system should be checked, especially those areas which will no longer be accessible after installation. Physical injuries such as an electric shock can be prevented that way.

Please check

- if cables are kinked or squeezed.
- if cable insulations are undamaged.

NOTE!

All clearances must be checked in cold condition!

In case of deviatons the clearances must be adjusted in an appropriate way (e.g. by machining the nozzle retainer frame plate or the pressure pads of the manifold).

Attention: The adjustment must not have influence on the dimension X of the nozzle!

1. Check the clearance ΔS between the surface of the upper pressure pad (pos. 1.4) and the surface of the nozzle retainer frame plate (pos. 53) and compare it to the value given in the drawing provided by EWIKON.
2. Install the clamping plate (pos. 51) and the insulating plate (pos. 50).
3. Install the locating ring (pos. 6) and fix it with socket head screws (pos. 6.1, ISO 4762 - 12.9). Tighten with matching torque. See chapter „9. Tightening torques“
4. Wire the nozzles and the manifold according to the wiring scheme. Please pay attention to the notes in chapter „5.7 Electrical connection of hot runner systems“.
5. In order to clearly identify the hot runner system attach the type plate included in the delivery prominently to the operator side of the mould.

5.6.5 Installation of systems with HPS III-MH1 nozzles for side gating with open flow channel

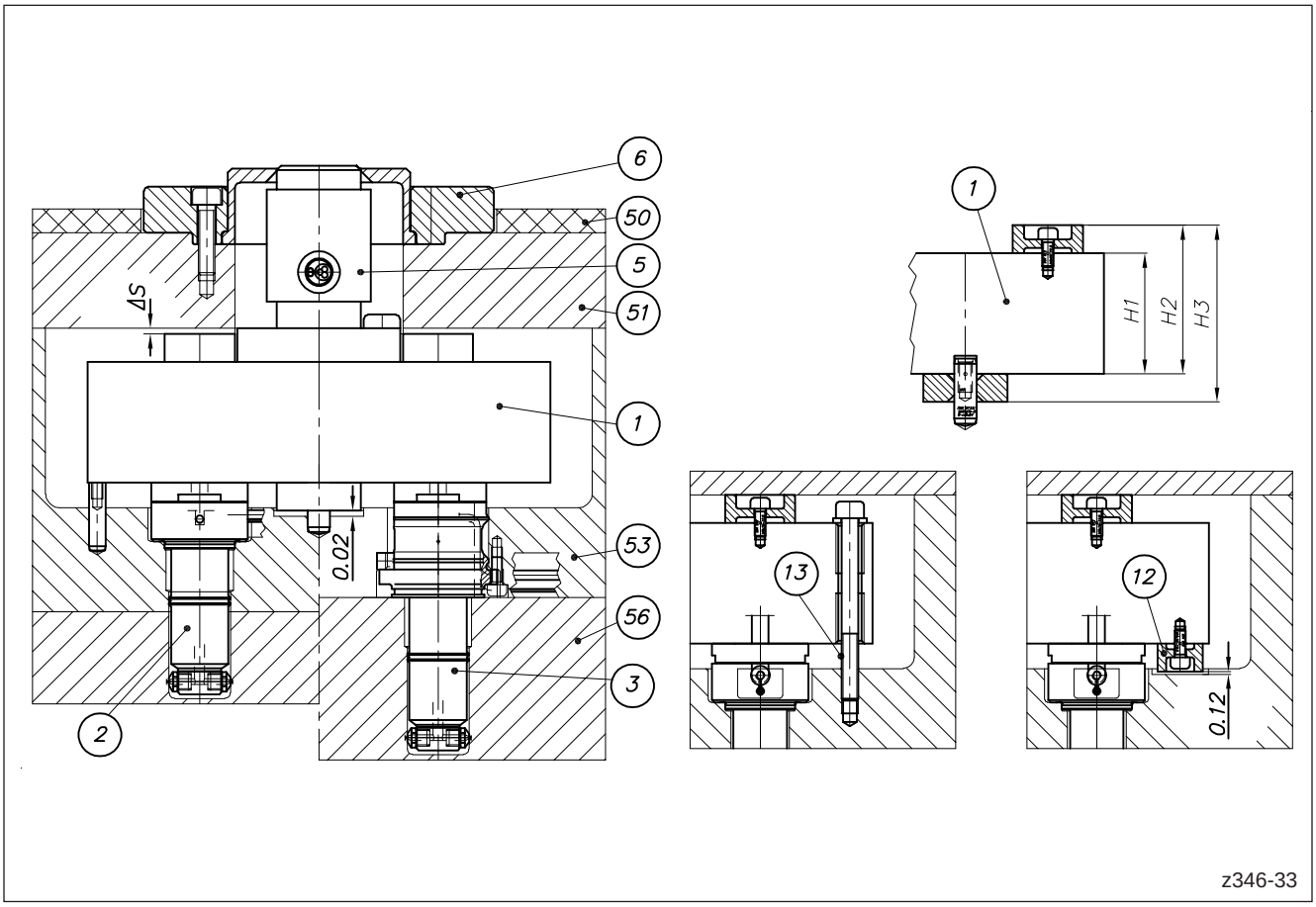

Picture 60: General layout of a system with HPS III-MH1 nozzles for side gating with open flow channel

Pos. 1 Manifold

Pos. 2 HPS III-MH1 nozzle for standard installation

Pos. 3 HPS III-MH1 nozzle for front installation

Pos. 5 Sprue bush

Pos. 6 Locating ring

Pos. 12 Tilting preventing pad (depending on order)

Pos. 13 Screw connection for manifold (only for standard installation)

Pos. 50 Insulating plate

Pos. 51 Clamping plate

Pos. 53 Nozzle retainer frame plate

Pos. 56 Contour plate (fixed mould half)

NOTE!

Read operating manual

In the installation process described in the following hazards for the personal health are listed explicitly.

Furthermore, during installation the warning, safety and installation notes for installation of EWIKON hot runner systems and components as specified in chapter „5.2 General safety instructions“ must be followed!

NOTE!

Dimensional check

Before installation the installation dimensions as listed in chapter „5.4 Checks before installation“ must be checked and compared with the values provided with the installation drawing.

Use approved standard parts only

Only standard parts which are approved for use in EWIKON hot runner systems must be used. See chapter „5.3 Technical Requirements“.

Screw connection for manifold

The screw connection for the manifold (pos. 13) is only required when nozzles for standard installation are used. **When nozzles for front installation are installed the manifold must not be screw connected.**

Installation of a HPS III-MH1 nozzle for standard installation

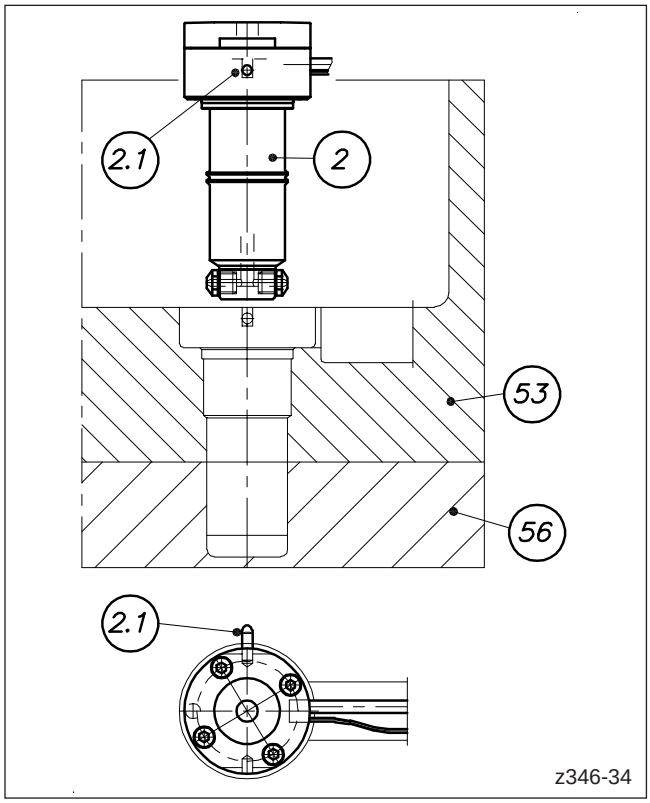

Picture 61: Standard installation of a HPS III-MH1 nozzle

HAZARD!

Connected power supply during installation

Risk of deadly electric shock or severe injuries due to live components.

- The hot runner system and the mould have to be disconnected from the voltage source during installation.

WARNING!

Sharp edges and heavy components

- Cut injuries to body and extremities, mainly to the hands.
- Crushing of fingers or hand.

Control of live components before installation

The electrical equipment of the hot runner system should be checked, especially those areas which will no longer be accessible after installation. Physical injuries such as an electric shock can be prevented that way.

Please check

- if cables are kinked or squeezed.
- if cable insulations are undamaged.

1. Insert the nozzle (pos. 2) carefully and without tilting into the nozzle retainer frame plate (pos. 53).
   Pay attention to the position of the dowel pin (pos. 2.1, ISO 2338-A, lock against rotation) at the nozzle body. It must be placed in the corresponding cutout in the nozzle retainer frame plate (pos. 53)
   At the same time carefully bend the connection cables of the nozzle according to the position of the cable channels. The minimum bending radius is 15 mm. The connection cables can only be bended once.
2. Place the connection cables in the cable channels and mark them according to their function (power / thermocouple) and position in the mould.

Installation of a HPS III-MH1 nozzle for front installation

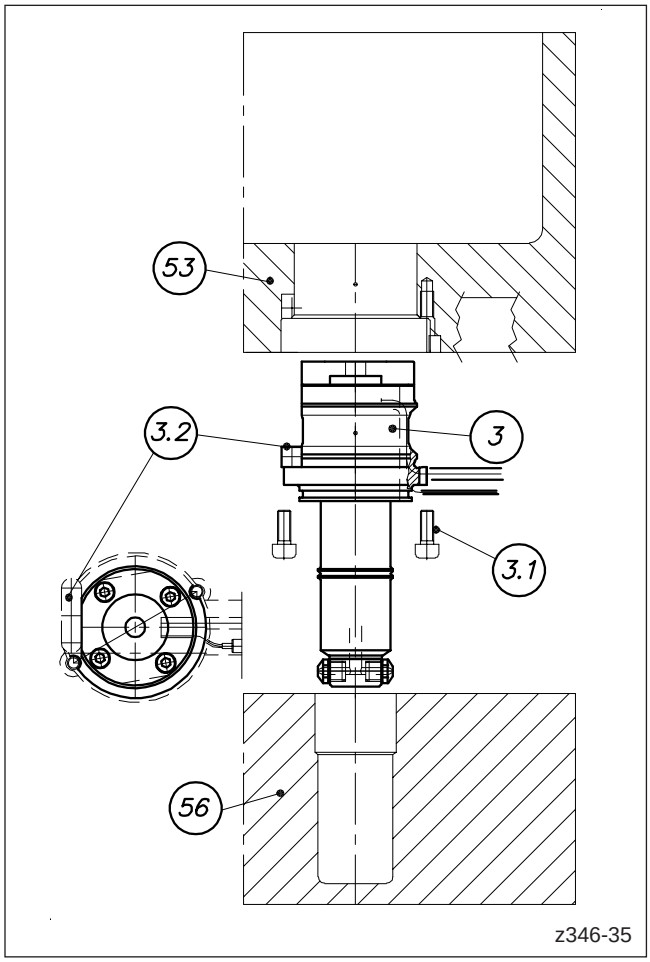

Picture 62: Front installation of a HPS III-MH1 nozzle

HAZARD!

Connected power supply during installation

Risk of deadly electric shock or severe injuries due to live components.

- The hot runner system and the mould have to be disconnected from the voltage source during installation.

WARNING!

Sharp edges and heavy components

- Cut injuries to body and extremities, mainly to the hands.
- Crushing of fingers or hand.

Control of live components before installation

The electrical equipment of the hot runner system should be checked, especially those areas which will no longer be accessible after installation. Physical injuries such as an electric shock can be prevented that way.

Please check

- if cables are kinked or squeezed.
- if cable insulations are undamaged.

1. Install the feather key (pos. 3.2, ISO 773, lock against rotation) in the nozzle retainer frame plate (pos. 53).
2. Install the nozzle (pos. 3) in the nozzle retainer frame plate (pos. 53).
   At the same time carefully bend the connection cables of the nozzle according to the position of the cable channels. The minimum bending radius is 15 mm. The connection cables can only be bended once.
   Fix the nozzle (pos. 3) by screwing in two socket head screws (pos. 3.1, ISO 4762 - min. 8.8) up to the stop. Tighten with matching torque. See chapter „9.2 Tightening torques for manifold screw connections and retaining screws“.
3. Place the connection cables in the cable channels and mark them according to their function (power / thermocouple) and position in the mould.

Manifold installation - preliminary measures

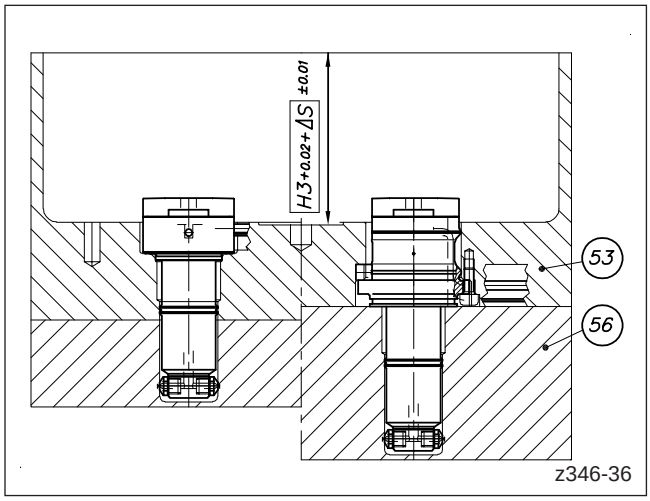

Picture 63: Check of reference dimensions before installation of manifold (left: standard installation, right: front installation)

After nozzle installation check the dimension **H3 + 0.02 + ΔS** between the upper surface of the nozzle retainer frame plate (pos. 53) and the contact surface for the centre support of the manifold and compare it to the value given in the drawing provided by EWIKON.

Installation of the sprue bush on the manifold

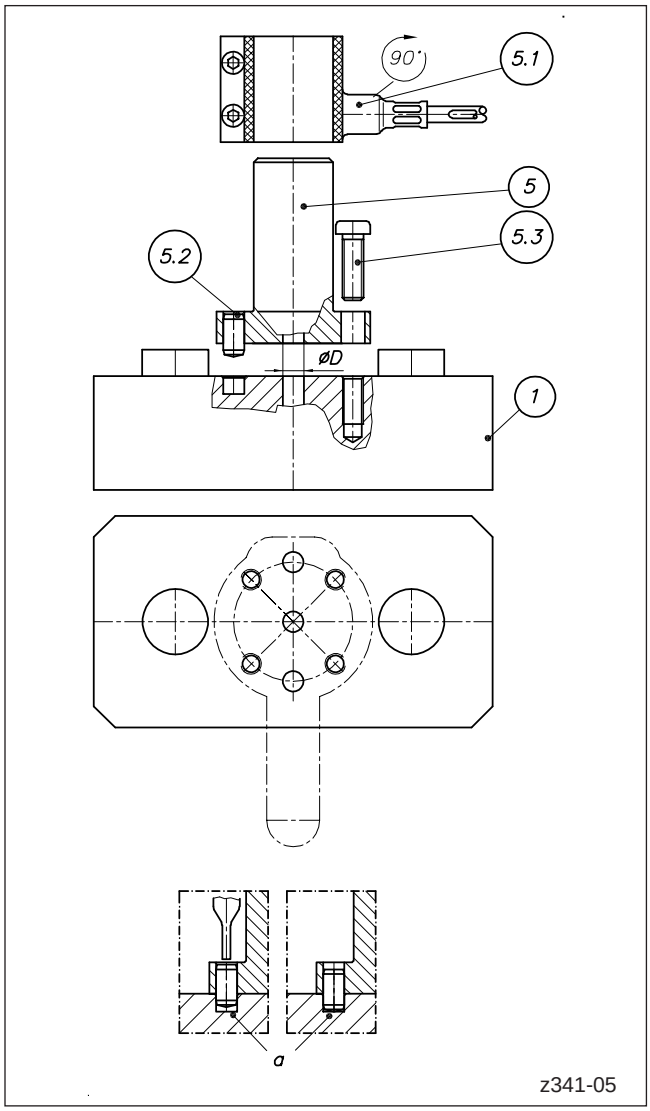

Picture 64: Installation of a sprue bush

NOTE!

The installation process described in the folllowing will only be required if a sprue bush is delivered as spare part.

A new manifold has the sprue bush pre-installed.

HAZARD!

Connected power supply during installation

Risk of deadly electric shock or severe injuries due to live components.

- The hot runner system and the mould have to be disconnected from the voltage source during installation.

1. The diameter D of the sprue bush (pos. 5) must be identical to the diameter of the flow channel entrance in the manifold (pos. 1).
2. Insert dowel pins (pos. 5.2, ISO 8735) through the bores in the sprue bush into the fit bores in the manifold (pos. 1).
3. Screw in the socket head screws with flat head (pos. 5.3, DIN 6912 - 10.9) crosswise and tighten with matching torque. See chapter „9. Tightening torques“.
4. Drive the dowel pins (pos. 5.2) to the end of the fit bores in the manifold by using a punch (pos. α). The front diameter of the punch should always be smaller than the tapped blind hole bore in the dowel pin in order not to damage the thread.
5. Install the heater band (pos. 5.1) approx. 5 mm above the socket head screws (pos. 5.3) and tighten it.

Manifold installation - installation procedure

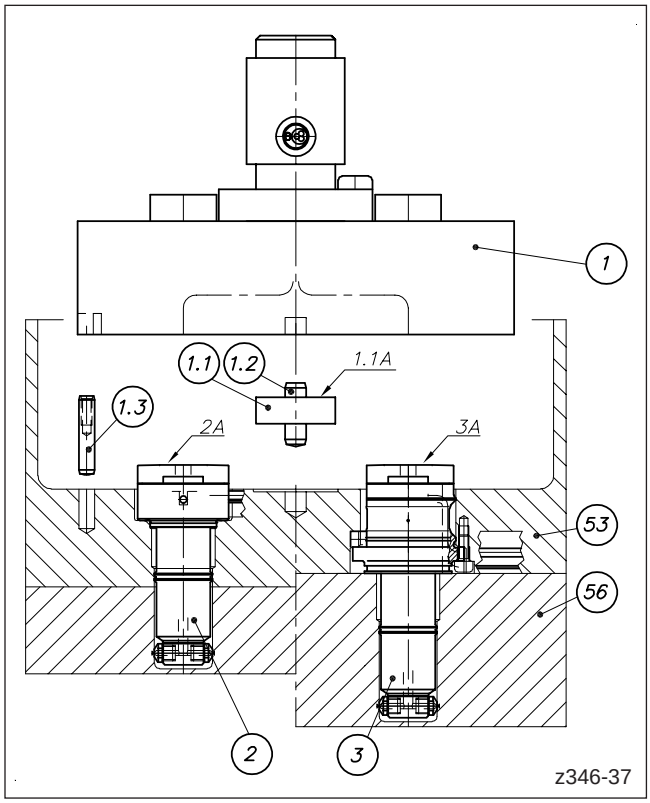

Picture 65: Installation of manifold for a HPS III hot runner system with HPS III-MH1 nozzles for side gating with open flow channel (left: standard installation, right: front installation)

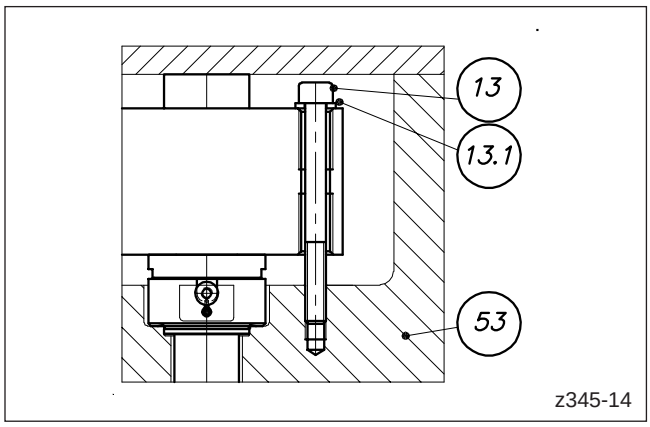

Picture 66: Screw connection for manifold with socket head screws (only for standard installation!)

NOTE!

Blueing of nozzles for front installation

Before blueing nozzles for front installation the contour plate (pos. 56) must be installed because otherwise the transfer of the blue is falsified.

HAZARD!

Connected power supply during installation

Risk of deadly electric shock or severe injuries due to live components.

- The hot runner system and the mould have to be disconnected from the voltage source during installation.

WARNING!

Sharp edges and heavy components

- Cut injuries to body and extremities, mainly to the hands.
- Crushing of fingers or hand.

Control of live components before installation

The electrical equipment of the hot runner system should be checked, especially those areas which will no longer be accessible after installation. Physical injuries such as an electric shock can be prevented that way.

Please check

- if cables are kinked or squeezed.
- if cable insulations are undamaged.

1. Insert the locating pin (pos. 1.2, ISO 8735) of the centre support (pos. 1.1) into the corresponding bore in the nozzle retainer frame plate (pos. 53).
2. Slide the centre support (pos. 1.1) over the locating pin (pos. 1.2).
3. Insert the dowel pin (pos. 1.3, lock against rotation, ISO 8735) into the bore.
4. Apply a thin and even coat of engineer's blue to the faces of the nozzle heads (surfaces 2A and 3A respectively) as well as to the face of the centre support (surface 1.1A).
5. Check the position of the connection cables of the nozzles (pos. 2, 3) again and align the connection cables of the manifold (pos. 1) to prevent squeezing when the manifold is installed.
6. Insert the manifold (pos. 1) carefully into the nozzle retainer frame plate (pos. 53). Pay attention to the position of the locating pin (pos. 1.2) and the lock against rotation (pos. 1.3).
7. Remove the manifold again (pos. 1) and check the transfer of the blue. The surfaces 2A and 3A must show an even transfer of the blue. The surface 1.1A must show no transfer of the blue because it must have a distance of 0.02 mm to the manifold.
8. Clean all surfaces from engineer's blue and insert the manifold (pos. 1) again. Place the connection cables in the cable channels and mark them according to their function (power / thermocouple) and position in the mould.
9. **The manifold must only be screw-connected when using nozzles for standard installation.**
   Screw the manifold to the nozzle retainer frame plate (pos. 53) by using socket head screws (pos. 13, ISO 4762 - min. 8.8) and plain washers (pos. 13.1, ISO 7089). Screw the socket head screws in to the stop then tighten with matching torque. See chapter „9.2 Tightening torques for manifold screw connections and retaining screws“.

Manifold installation - check of clearance ΔS, installation of clamping plate and locating ring

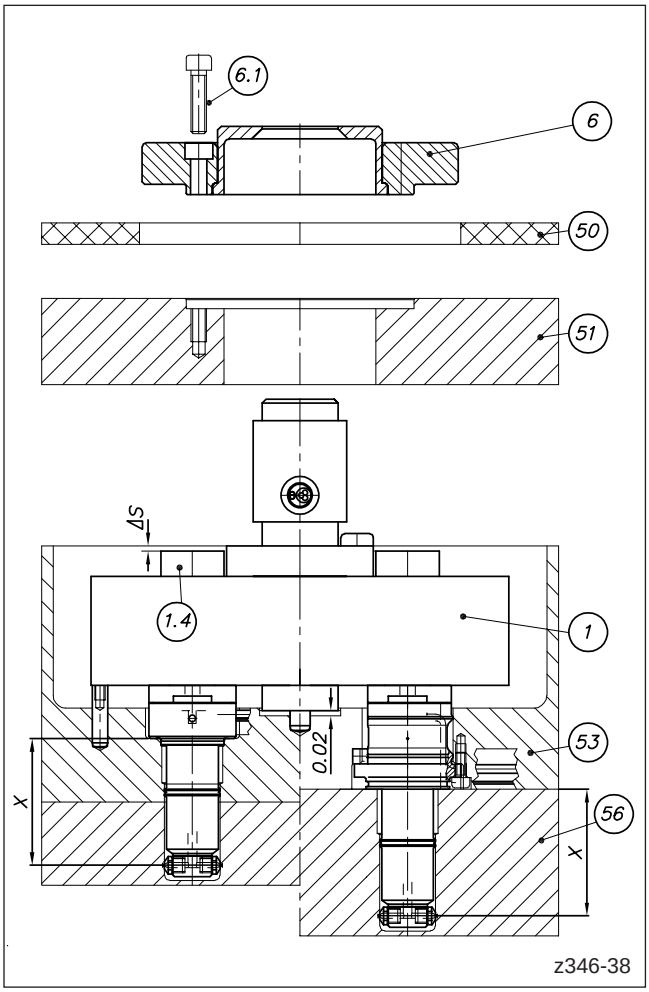

Picture 67: Check of clearance ΔS and subsequent installation steps

HAZARD!

Connected power supply during installation

Risk of deadly electric shock or severe injuries due to live components.

- The hot runner system and the mould have to be disconnected from the voltage source during installation.

WARNING!

Sharp edges and heavy components

- Cut injuries to body and extremities, mainly to the hands.
- Crushing of fingers or hand.

Control of live components before installation

The electrical equipment of the hot runner system should be checked, especially those areas which will no longer be accessible after installation. Physical injuries such as an electric shock can be prevented that way.

Please check

- if cables are kinked or squeezed.
- if cable insulations are undamaged.

NOTE!

All clearances must be checked in cold condition!

In case of deviatons the clearances must be adjusted in an appropriate way (e.g. by machining the nozzle retainer frame plate or the pressure pads of the manifold).

Attention: The adjustment must not have influence on the dimension X of the nozzle!

Checking of clearance when using nozzles for front installation

When nozzles for front installation are installed the contour plate (pos. 56) must be installed before the clearance **ΔS** is checked. Otherwise the measurement is falsified.

1. Check the clearance Δ**S** between the surface of the upper pressure pad (pos. 1.4) and the surface of the nozzle retainer frame plate (pos. 53) and compare it to the value given in the drawing provided by EWIKON.
2. Install the clamping plate (pos. 51) and the insulating plate (pos. 50).
3. Install the locating ring (pos. 6) and fix it with socket head screws (pos. 6.1, ISO 4762 - 12.9). Tighten with matching torque. See chapter „9. Tightening torques“.
4. Wire the nozzles and the manifold according to the wiring scheme. Please pay attention to the notes in chapter „5.7 Electrical connection of hot runner systems“.
5. In order to clearly identify the hot runner system attach the type plate included in the delivery prominently to the operator side of the mould.

5.6.6 Installation of a hot half with HPS III-MH nozzles

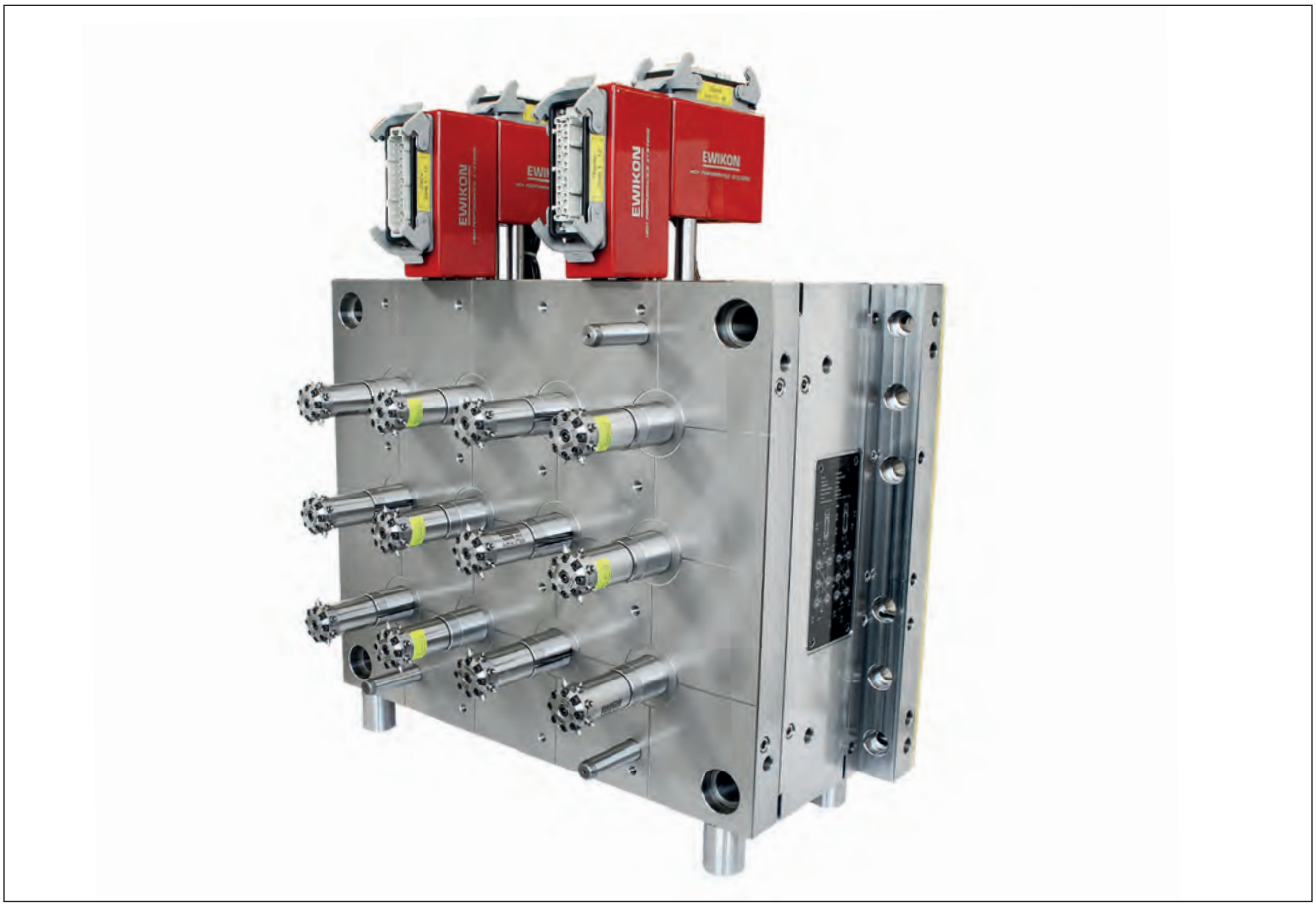

NOTE!

Read operating manual

In the installation process described in the following hazards for the personal health are listed explicitly.

Furthermore, during installation the warning, safety and installation notes for installation of EWIKON hot runner systems and components as specified in chapter „5.2 General safety instructions“ must be followed!

NOTE!

Dimensional check

Before installation the installation dimensions as listed in chapter „5.4 Checks before installation“ must be checked and compared with the values provided with the installation drawing.

Use approved standard parts only

Only standard parts which are approved for use in EWIKON hot runner systems must be used. See chapter „5.3 Technical Requirements“.

NOTE!

A hot half with HPS III-MH nozzle (nozzle types MH100, MH111, MH112, MH122, MH200) is always delivered with deinstalled tip inserts. The tip inserts are separately packed and included in the delivery. They must only be installed after installation of the contour plate.

Introduction and preliminary measures

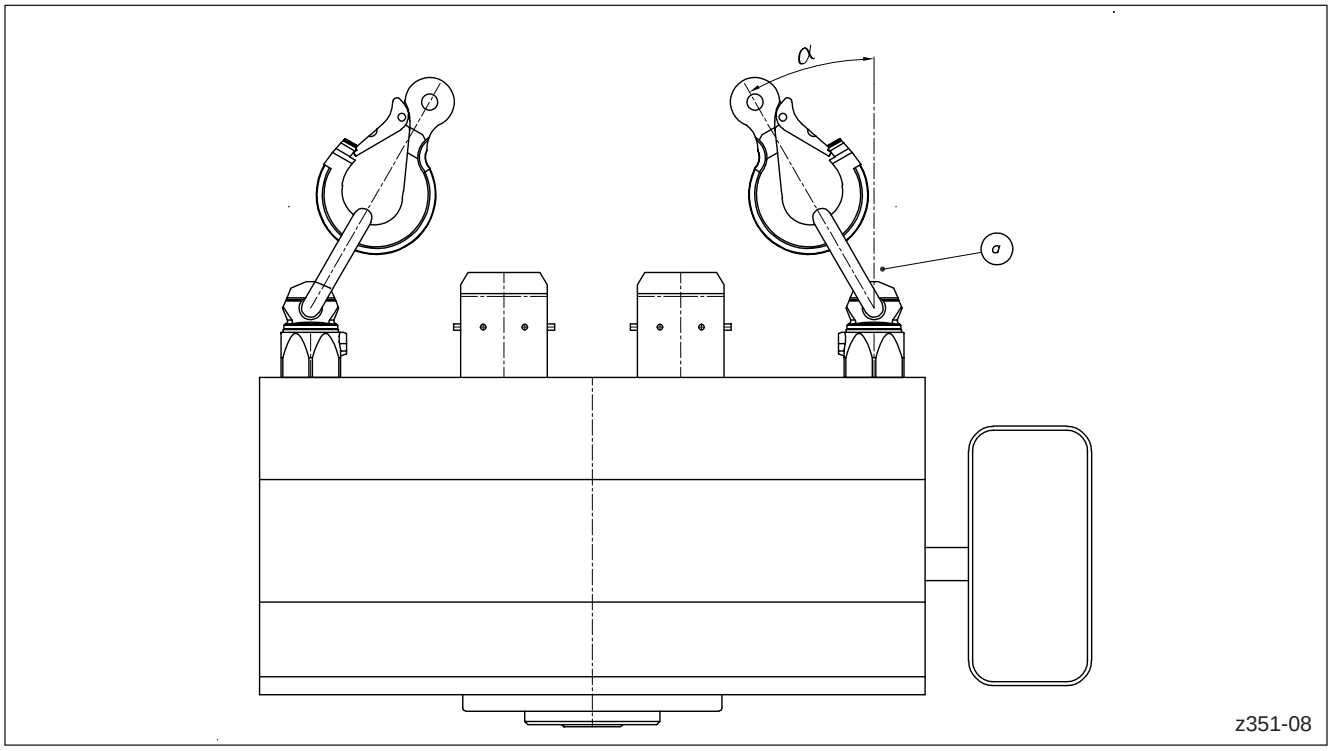

Picture 68: Preliminary measures

Suspended load

Death and severe crushing of body or extremities.

- Keep clear of and do not pass under suspended loads.
- Keep clear of suspended loads while they are being transported.
- Do not touch lifting devices and lifting accessories while lifting the load.
- Only lift, transport and set down loads, if you have received appropriate training.
- Only use suitable and undamaged lifting devices and lifting accessories which are checked regularly.
- Do not exceed the maximum load limit of lifting accessories.

Sharp edges and heavy components

- Cut injuries to body and extremities, mainly to the hands.
- Crushing of fingers or hand.

1. Lift the hot half carefully out of the transport crate. Due to the better force application point EWIKON recommends to use attachment swivels only (pos. a, see chapter „5.1 Transport“ and chapter „5.3.1 Tools and operating materials“).
2. Check the hot half for possible transport damage (visual check).

Installation -
hot half with HPS III-MHL 100/200 or HPS III-MHR 100/200 nozzles

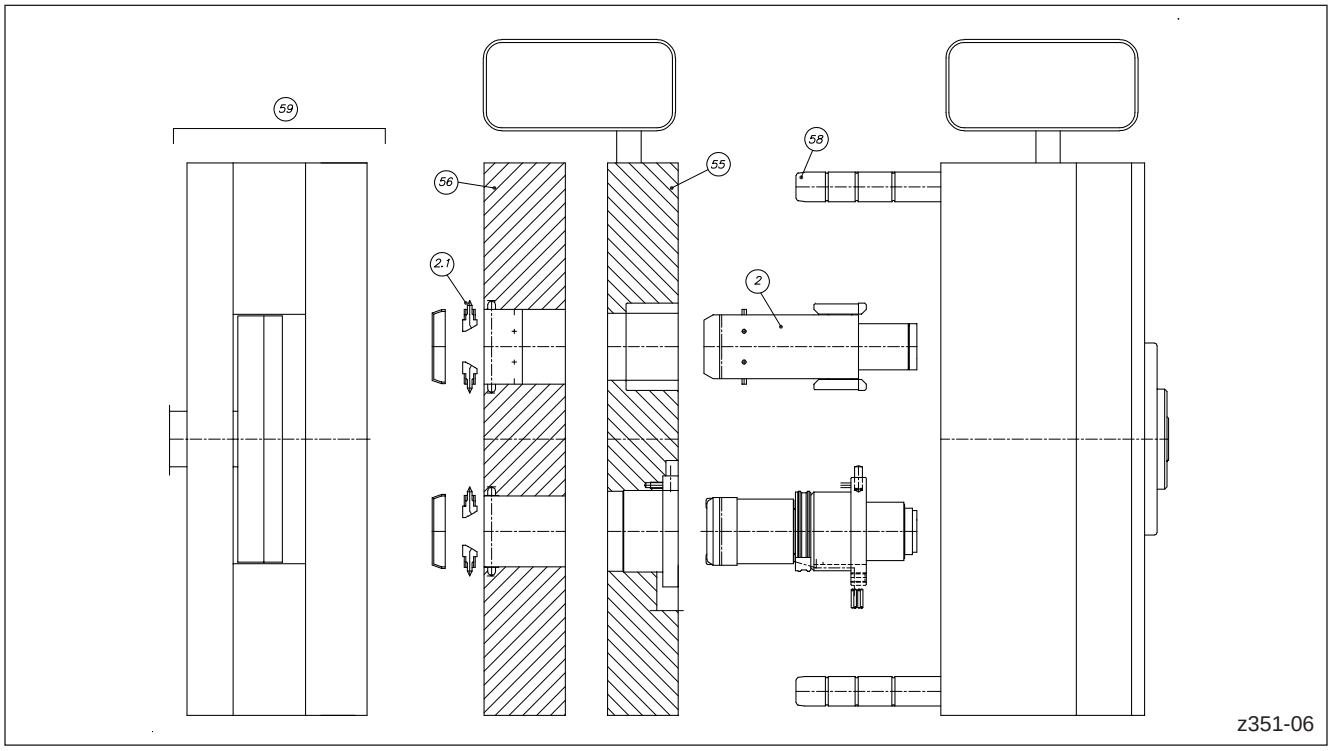

Picture 69: Installation

Installation - hot half with HPS III-MHL 100/200 or HPS III-MHR 100/200 nozzles

HAZARD!

Connected power supply during installation

Risk of deadly electric shock or severe injuries due to live components.

- The hot half and the mould have to be disconnected from the voltage source during installation.

WARNING!

Sharp edges and heavy components

- Cut injuries to body and extremities, mainly to the hands.
- Crushing of fingers or hand.

Control of live components before installation

The electrical equipment of the hot runner system should be checked, especially those areas which will no longer be accessible after installation. Physical injuries such as an electric shock can be prevented that way.

Please check

- if cables are kinked or squeezed.
- if cable insulations are undamaged.

Hot surfaces

Burns to the body caused by hot surfaces.

CAUTION!

Respect operating temperatures

Each hot runner system is individually designed for the material to be processed. Therefore, the specified operating temperatures must be observed. The temperature difference ΔT between hot runner temperature T_{HK} (processing temperature) and mould temperature T_{WZ}, must be strictly adhered to.

- Non-observance may cause an escape of melt inside the mould (ΔT too low) or damage to components (ΔT too large).

NOTE!

To avoid damage to the nozzles when installing the contour plate the guide elements should always be longer than the longest hot runner nozzle in the mould.

1. Check reference dimensions and tolerances of the hot half as well as of the contour plate (machined by customer) again and compare them to the values given in the installation drawing provided by EWIKON. For required reference dimensions also see chapters „5.4 Checks before installation“ and „5.6.1 Installation of systems with HPS III-MHL100/200 or HPS III-MHR100/200 nozzles“.
2. Install the included nozzle bodies (pos. 2) in the nozzle retainer plate (pos. 55). Follow the intructions given in chapter „5.6.1 Installation of systems with HPS III-MHL100/200 or HPS III-MHR100/200 nozzles“.
   Depending on the system specifications the hot half may have the nozzle retainer plate with nozzle bodies already installed. In this case this installation step is omitted.
3. Apply a thin coat of high performance grease (see chapter „5.3.1 Tools and operating materials“) to the guide elements (pos. 58). Install the nozzle retainer plate with nozzle bodies by carefully sliding it over the guide elements. Before, check required reference dimensions according to chapter „5.6.1 Installation of systems with HPS III-MHL100/200 or HPS III-MHR100/200 nozzles“.
   Check cable channels for correct positioning of cables to prevent squeezing.
   Depending on the system specifications the hot half may have the nozzle retainer plate with nozzle bodies already installed. In this case this installation step is omitted.
4. Install the contour plate (pos. 56) by carefully sliding it over the guide elements (pos. 58).
5. Install the included tip inserts (pos. 2.1). Follow the intructions given in chapter „5.6.1 Installation of systems with HPS III-MHL100/200 or HPS III-MHR100/200 nozzles“.
6. Check if plug assignment is in accordance with the wiring plan provided by EWIKON.
7. Complete the mould with the moving mould half (pos. 59) and mount it on the machine.
8. Connect the supply lines for cooling with the corresponding connections at the hot half. Check cooling circuit for free flow.
9. Connect the hot half to the hot runner controller and heat it up in diagnosis mode. If the controller does not feature a diagnosis function heat up each zone separately and check if the thermocouple and power connections are allocated correctly.

Installation -
hot half with HPS III-MHR111 or HPS III-MHR112 nozzles

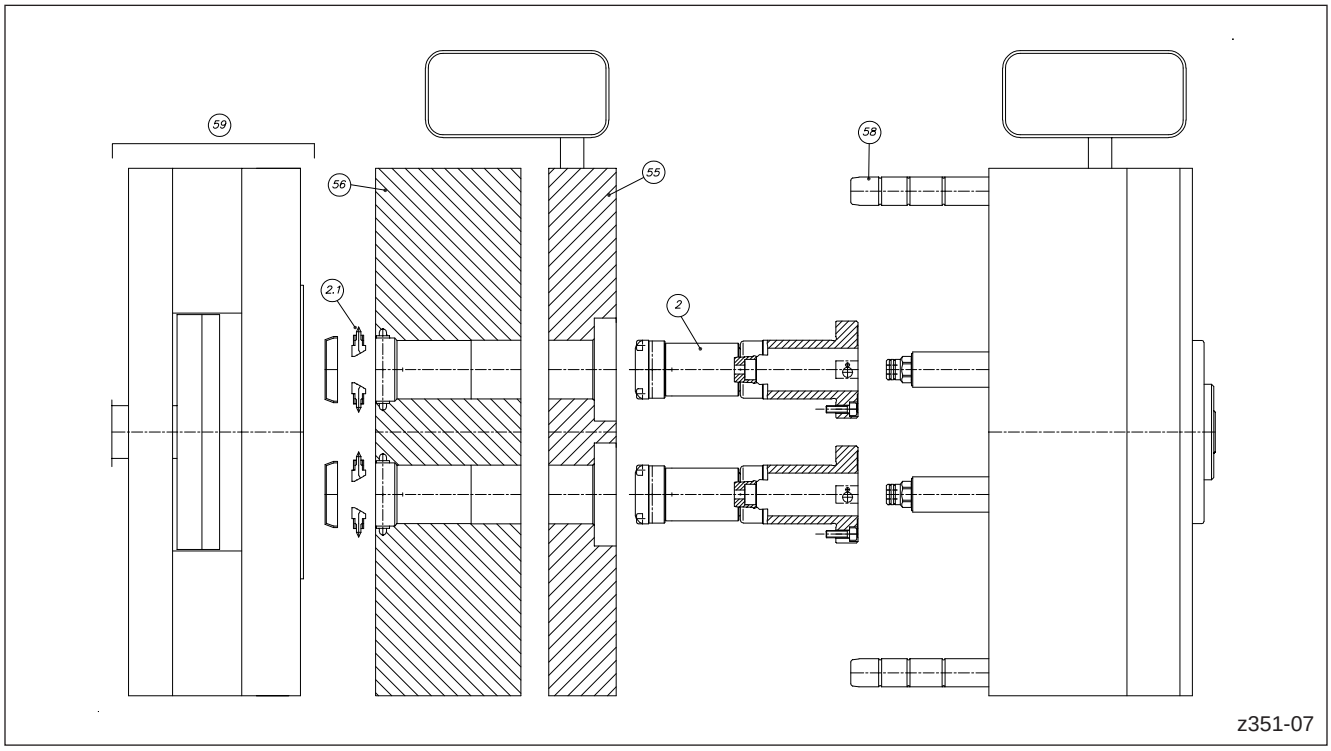

Picture 70: Installation

Installation - hot half with HPS III-MHR111 or HPS III-MHR112 nozzles

HAZARD!

Connected power supply during installation

Risk of deadly electric shock or severe injuries due to live components.

- The hot half and the mould have to be disconnected from the voltage source during installation.

WARNING!

Sharp edges and heavy components

- Cut injuries to body and extremities, mainly to the hands.
- Crushing of fingers or hand.

Control of live components before installation

The electrical equipment of the hot runner system should be checked, especially those areas which will no longer be accessible after installation. Physical injuries such as an electric shock can be prevented that way.

Please check

- if cables are kinked or squeezed.
- if cable insulations are undamaged.

Hot surfaces

Burns to the body caused by hot surfaces.

CAUTION!

Respect operating temperatures

Each hot runner system is individually designed for the material to be processed. Therefore, the specified operating temperatures must be observed. The temperature difference ΔT between hot runner temperature T_{HK} (processing temperature) and mould temperature T_{WZ}, must be strictly adhered to.

- Non-observance may cause an escape of melt inside the mould (ΔT too low) or damage to components (ΔT too large).

NOTE!

To avoid damage to the nozzles when installing the contour plate the guide elements should always be longer than the longest hot runner nozzle in the mould.

1. Check reference dimensions and tolerances of the hot half as well as of the contour plate (machined by customer) again and compare them to the values given in the installation drawing provided by EWIKON. For required reference dimensions also see chapters „5.4 Checks before installation“ as well as „5.6.2 Installation of systems with HPS III-MHR111 nozzles“ or. „5.6.3 Installation of systems with HPS III-MHR112 nozzles“ respectively.
2. Install the included nozzle bodies (pos. 2) in the nozzle retainer plate (pos. 55). Follow the intructions given in chapter „5.6.2 Installation of systems with HPS III-MHR111 nozzles“ or „5.6.3 Installation of systems with HPS III-MHR112 nozzles“ respectively.
   Depending on the system specifications the hot half may have the nozzle retainer plate with nozzle bodies already installed. In this case this installation step is omitted.
3. Apply a thin coat of high performance grease (see chapter „5.3.1 Tools and operating materials“) to the guide elements (pos. 58). Install the nozzle retainer plate with nozzle bodies by carefully sliding it over the guide elements. Before, check required reference dimensions according to chapter „5.6.2 Installation of systems with HPS III-MHR111 nozzles“ or „5.6.3 Installation of systems with HPS III-MHR112 nozzles“ respectively.
   Check cable channels for correct positioning of cables to prevent squeezing.
   Depending on the system specifications the hot half may have the nozzle retainer plate with nozzle bodies already installed. In this case this installation step is omitted.
4. Install the contour plate (pos. 56) by carefully sliding it over the guide elements (pos. 58).
5. Install the included tip inserts (pos. 2.1). Follow the intructions given in chapters „5.6.2 Installation of systems with HPS III-MHR111 nozzles“ or „5.6.3 Installation of systems with HPS III-MHR112 nozzles“ respectively.
6. Check if plug assignment is in accordance with the wiring plan provided by EWIKON.
7. Complete the mould with the moving mould half (pos. 59) and mount it on the machine.
8. Connect the supply lines for cooling with the corresponding connections at the hot half. Check cooling circuit for free flow.
9. Connect the hot half to the hot runner controller and heat it up in diagnosis mode. If the controller does not feature a diagnosis function heat up each zone separately and check if the thermocouple and power connections are allocated correctly.

Installation -
hot half with HPS III-MHR122 nozzles

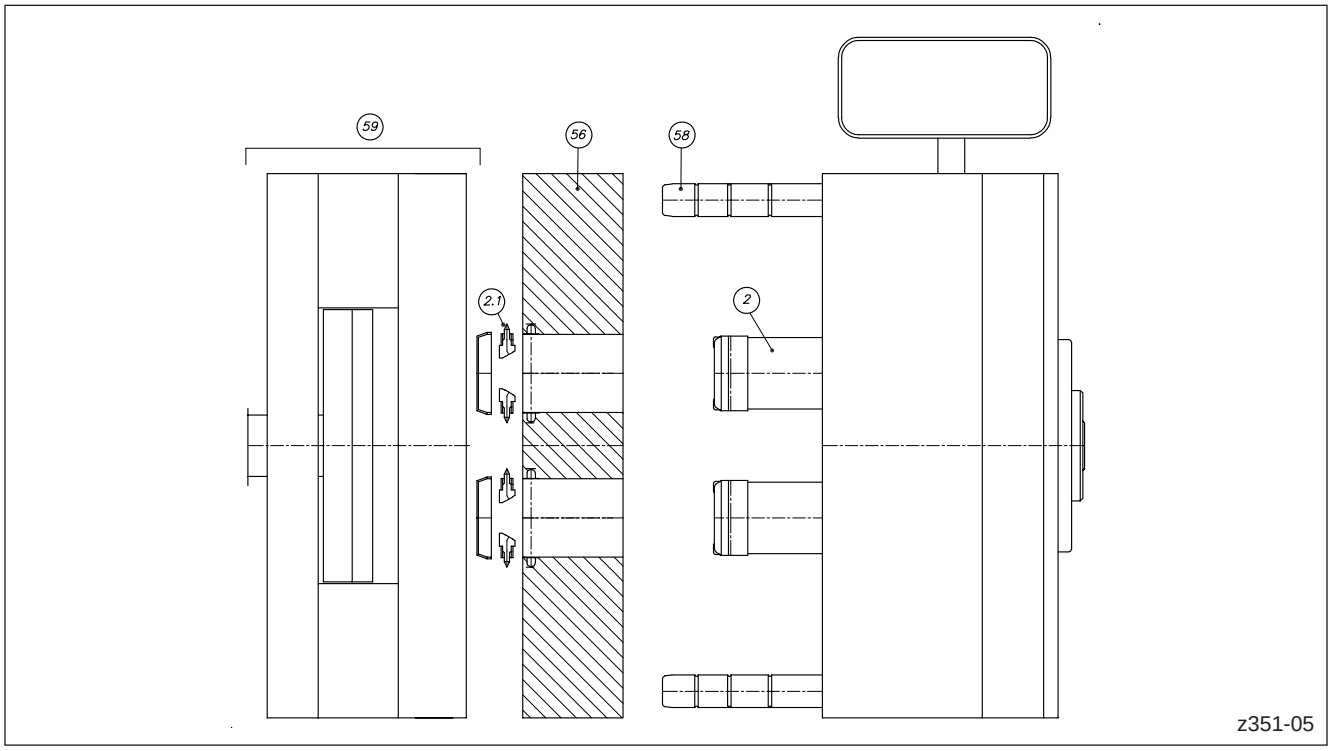

Picture 71: Installation

Installation - hot half with HPS III-MHR122 nozzles

HAZARD!

Connected power supply during installation

Risk of deadly electric shock or severe injuries due to live components.

- The hot half and the mould have to be disconnected from the voltage source during installation.

WARNING!

Sharp edges and heavy components

- Cut injuries to body and extremities, mainly to the hands.
- Crushing of fingers or hand.

Control of live components before installation

The electrical equipment of the hot runner system should be checked, especially those areas which will no longer be accessible after installation. Physical injuries such as an electric shock can be prevented that way.

Please check

- if cables are kinked or squeezed.
- if cable insulations are undamaged.

Hot surfaces

Burns to the body caused by hot surfaces.

CAUTION!

Respect operating temperatures

Each hot runner system is individually designed for the material to be processed. Therefore, the specified operating temperatures must be observed. The temperature difference ΔT between hot runner temperature T_{HK} (processing temperature) and mould temperature T_{WZ}, must be strictly adhered to.

- Non-observance may cause an escape of melt inside the mould (ΔT too low) or damage to components (ΔT too large).

NOTE!

To avoid damage to the nozzles when installing the contour plate the guide elements should always be longer than the longest hot runner nozzle in the mould.

1. Check reference dimensions and tolerances of the hot half as well as of the contour plate (machined by customer) again and compare them to the values given in the installation drawing provided by EWIKON. For required reference dimensions also see chapter „5.4 Checks before installation“.
2. Apply a thin coat of high performance grease (see chapter „5.3.1 Tools and operating materials“) to the guide elements (pos. 58). Install the contour plate (pos. 56) by carefully sliding it over the guide elements (pos. 58).
3. Install the included tip inserts (pos. 2.1). Follow the intructions given in chapter „5.6.4 Installation of systems with HPS III-MHR122 nozzles“.
4. Check if plug assignment is in accordance with the wiring plan provided by EWIKON.
5. Complete the mould with the moving mould half (pos. 59) and mount it on the machine.
6. Connect the supply lines for cooling with the corresponding connections at the hot half. Check cooling circuit for free flow.
7. Connect the hot half to the hot runner controller and heat it up in diagnosis mode. If the controller does not feature a diagnosis function heat up each zone separately and check if the thermocouple and power connections are allocated correctly.

Installation -
hot half with HPS III-MH1 nozzles

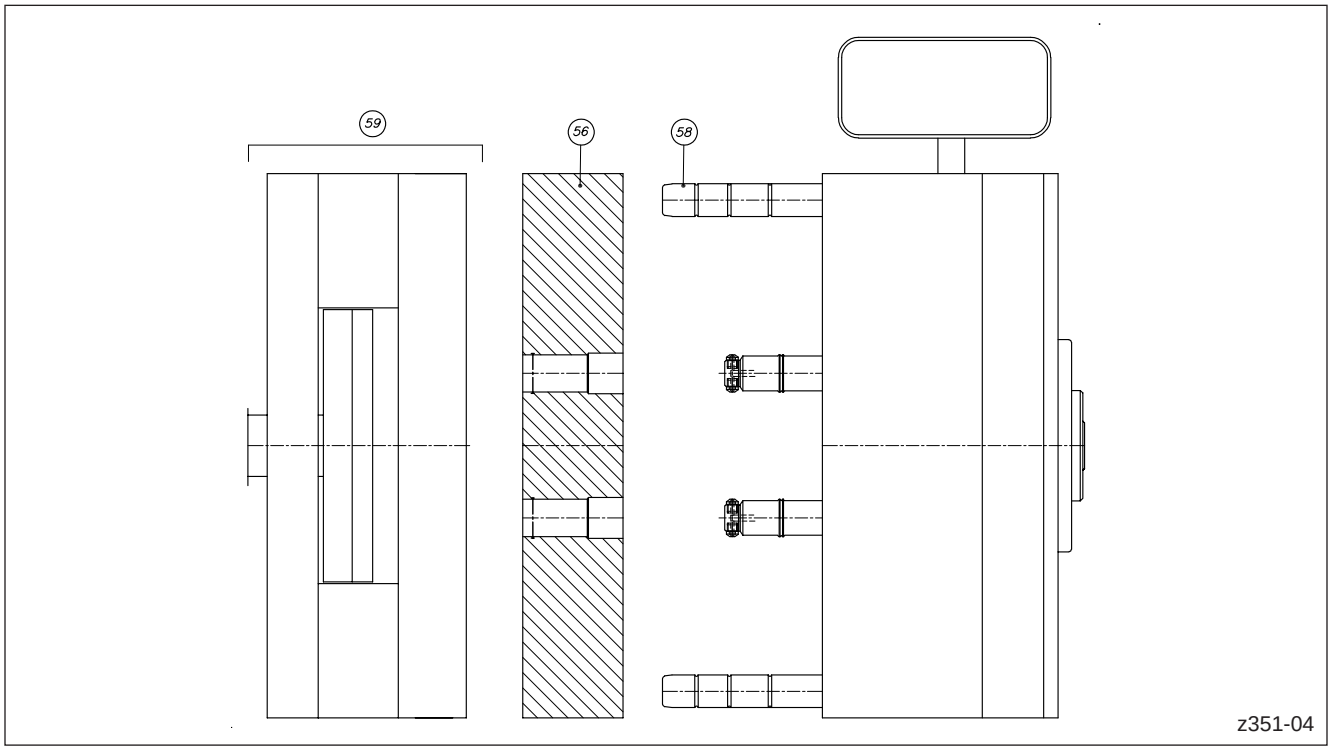

Picture 72: Installation

Installation - hot half with HPS III-MH1 nozzles

HAZARD!

Connected power supply during installation

Risk of deadly electric shock or severe injuries due to live components.

- The hot half and the mould have to be disconnected from the voltage source during installation.

WARNING!

Sharp edges and heavy components

- Cut injuries to body and extremities, mainly to the hands.
- Crushing of fingers or hand.

Control of live components before installation

The electrical equipment of the hot runner system should be checked, especially those areas which will no longer be accessible after installation. Physical injuries such as an electric shock can be prevented that way.

Please check

- if cables are kinked or squeezed.
- if cable insulations are undamaged.

Hot surfaces

Burns to the body caused by hot surfaces.

CAUTION!

Respect operating temperatures

Each hot runner system is individually designed for the material to be processed. Therefore, the specified operating temperatures must be observed. The temperature difference ΔT between hot runner temperature T_{HK} (processing temperature) and mould temperature T_{WZ}, must be strictly adhered to.

- Non-observance may cause an escape of melt inside the mould (ΔT too low) or damage to components (ΔT too large).

NOTE!

To avoid damage to the nozzles when installing the contour plate the guide elements should always be longer than the longest hot runner nozzle in the mould.

1. Check reference dimensions and tolerances of the hot half as well as of the contour plate (machined by customer) again and compare them to the values given in the installation drawing provided by EWIKON. For required reference dimensions also see chapter „5.4 Checks before installation“.
2. Apply a thin coat of high performance grease (see chapter „5.3.1 Tools and operating materials“) to the guide elements (pos. 58). Install the contour plate (pos. 56) by carefully sliding it over the guide elements (pos. 58).
   If the hot half features open cable channels for example when nozzles for front installation are installed check the position of the connection cables of the nozzles again to prevent squeezing when the contour plate is installed.
3. Check if plug assignment is in accordance with the wiring plan provided by EWIKON.
4. Complete the mould with the moving mould half (pos. 59) and mount it on the machine.
5. Connect the supply lines for cooling with the corresponding connections at the hot half. Check cooling circuit for free flow.
6. Connect the hot half to the hot runner controller and heat it up in diagnosis mode. If the controller does not feature a diagnosis function heat up each zone separately and check if the thermocouple and power connections are allocated correctly.

5.7 Electrical connection of hot runner systems

5.7.1 Safety instructions

HAZARD!

Connected power supply during installation

Risk of deadly electric shock or severe injuries due to live components.

- The HPS III hot runner system, the single tip, the hot half and the mould have to be disconnected from the voltage source during installation.

Insufficient protective conductor connection to the injection moulding machine

Risk of deadly electric shock or severe injuries due to live components.

The operator must ensure that during startup of hot runner single tips or hot runner systems all electrical system components have been wired to to the protective conductor system of the injection moulding machine or are protected by equivalent safety measures before applying electric voltage. When applying electric voltage to systems or to system components beyond specified normal operation, sufficient ground earth connection or equivalent safety measures must be ensured for each component.

WARNING!

Control of live components before installation

The electrical equipment of the hot runner system should be checked, especially those areas which will no longer be accessible after installation. Physical injuries such as an electric shock can be prevented that way

Please check

- if cables are kinked or squeezed.
- if cable insulations are undamaged.

NOTE!

Mechanical stress of cable ends

The cable ends must not be subject to tensile stress.

Protect the cable ends

When wiring the system make sure that the thermo and power lines do not protrude from the outer edges of the mould and are protected against damage. The distances between hot runner and cables inside the mould have to be dimensioned in such a way that there is no damage to the components caused by excessive heat.

Secure the connection cables

All connecting cables have to secured in such a way that they do not get pinched when they are installed in the mould (use cable binders and/or covering plates for the recesses).

Adhere to bending radiuses

The bending radiuses of the coil heater and the thermocouple have to be adhered to. The minimum bending radius is 15 mm. The connection can only be bended once.

General instructions for wiring

- Place the cables in such a way that there is no direct contact with hot surfaces and that the expected temperature is below the maximum allowable temperature for the wire insulation.
- Place the cables in such a way that they can not get pinched when the hot runner system is installed.
- When placing the cables keep clear of sharp edges.

5.7.2 General information

Wiring of the hot runner components must be performed by qualified staff according to DIN EN 60204-1 and the generally recognized codes of practice.

Heaters designed for a rated voltage of 230V AC are used. Please make sure that the voltage applied corresponds to this specification. The heaters are connected to the plug according to the arrangement given in the wiring diagram of the respective hot runner system. The following pictures give an overview of the cable assignment of HPS III nozzles and manifolds.

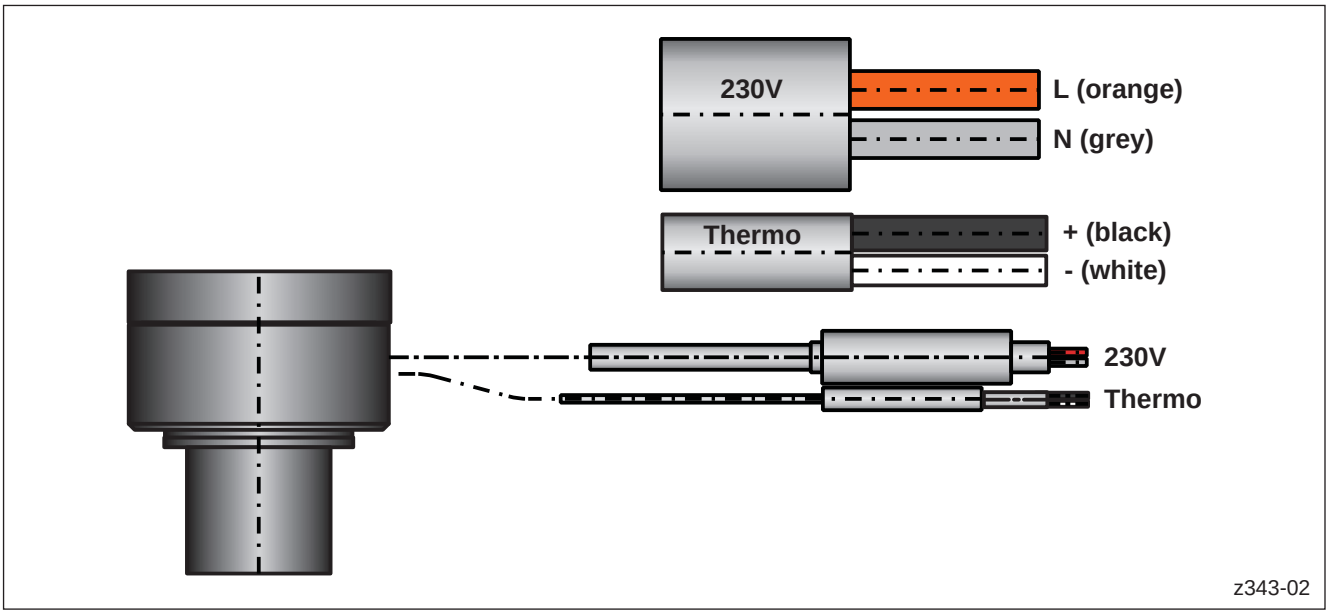

Picture 73: Cable assignment of HPS III-S nozzles (one control zone)

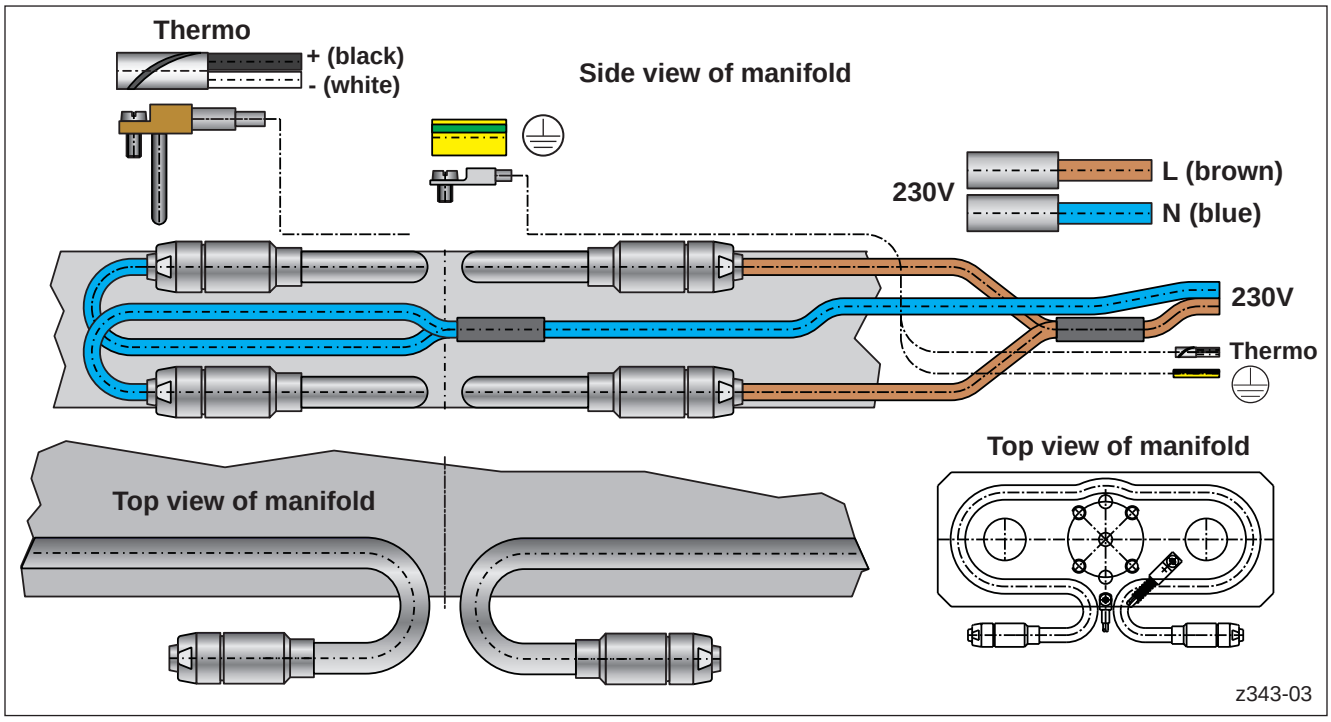

Picture 74: Cable assignment of HPS III manifolds (shown: one control zone)

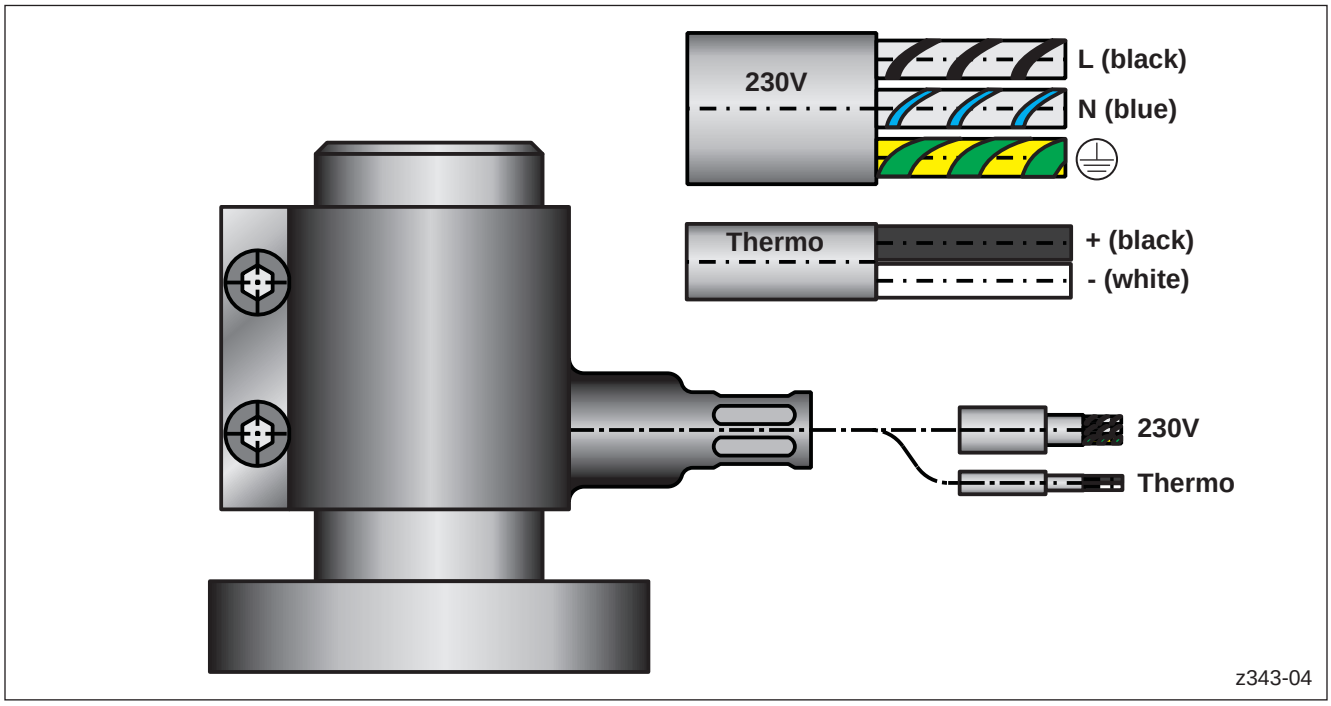

Picture 75: Cable assignment of heater bands for sprue bushs (one control zone)

Generally the cable pairs for heaters are brown and blue (manifold heaters) and orange and grey (nozzle heaters) respectively. A sufficient protective earthing of the hot runner system must be ensured.

Furthermore, thermocouples type J (Fe-CuNi) are used. The hot runner controller used must be designed to work with that type. The wiring follows the wiring plan of the hot runner system. Generally the cable pairs are black (+) and white (-).

General information for wiring of standard hot runner systems

Position of nozzles in the mould

Most EWIKON hot runner systems are delivered as complete hot halves. As far as there is no differing specification from the customer side, the position of the nozzles is defined as following: When viewing from the parting line in direction of the nozzle tips, the nozzles are numbered line-by-line from top left to bottom right according to the scheme shown below. If the manifold has multiple heaters, the same numbering scheme is applied. The power and thermo collective plugs are numbered consecutively:

(230 V: X-1.1, X-2.1, X-3.1... / Thermo: X-1.2, X-2.2, X-3.2....).

EWIKON recommends to apply this numbering scheme also when purchasing components instead of hot halves.

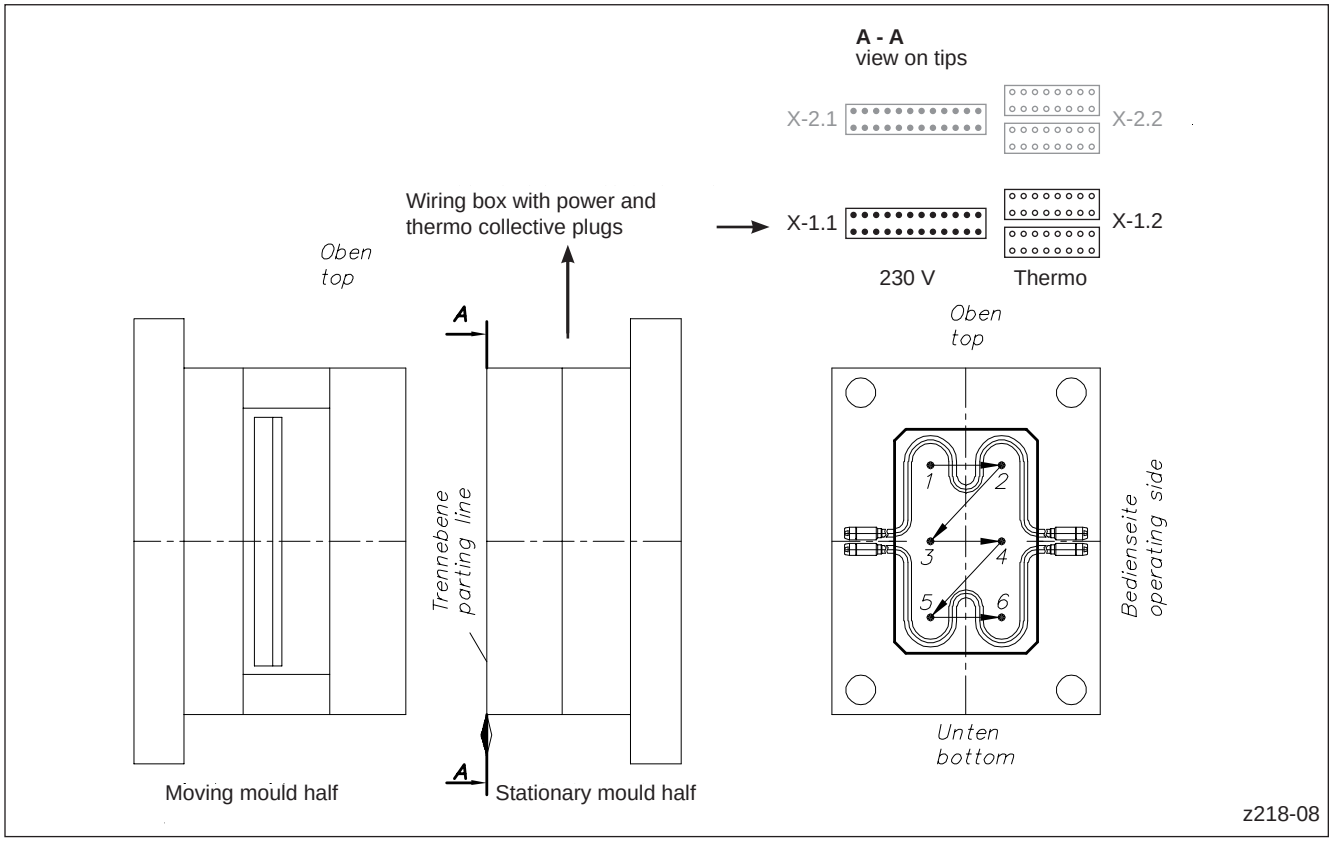

Picture 76: General information for wiring of standard hot runner systems

Wiring order (Example: 6-drop system):

The control zones are numbered consecutively, beginning at the position of the first nozzle (top left). Each control zone has a heater and a thermocouple assigned. First all nozzles (H-01 - H-06) should be wired, then all manifold heaters (M-01 - M-02) and at last the heater of the connecting nozzle (CN-01). The contact allocation follows DIN 16765, part A.

Detailed wiring instructions for standard system configurations are shown on the following pages.

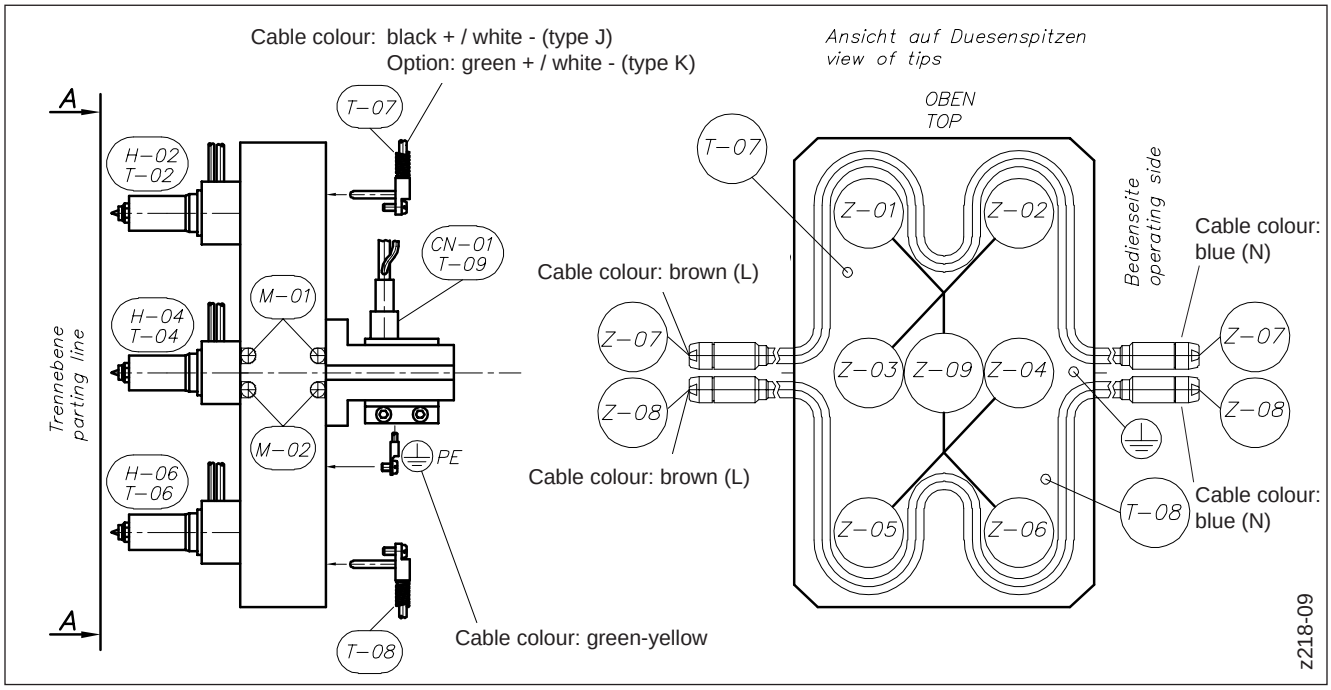

Picture 77: Wiring order (example: 6-drop system)

Key to the symbols	
Z	Control zone
H	Heater nozzle
M	Heater manifold
CN	Heater band sprue bush
T	Thermocouple
PE ⏚	Protective earth conductor
L	Phase conductor
N	Neutral conductor

Control zone Z	230 V	Thermo
Z-01	H-01	T-01
Z-02	H-02	T-02
Z-03	H-03	T-03
Z-04	H-04	T-04
Z-05	H-05	T-05
Z-06	H-06	T-06
Z-07	M-01	T-07
Z-08	M-02	T-08
Z-09	CN-01	T-09

5.7.3 Wiring of 1-drop hot runner systems

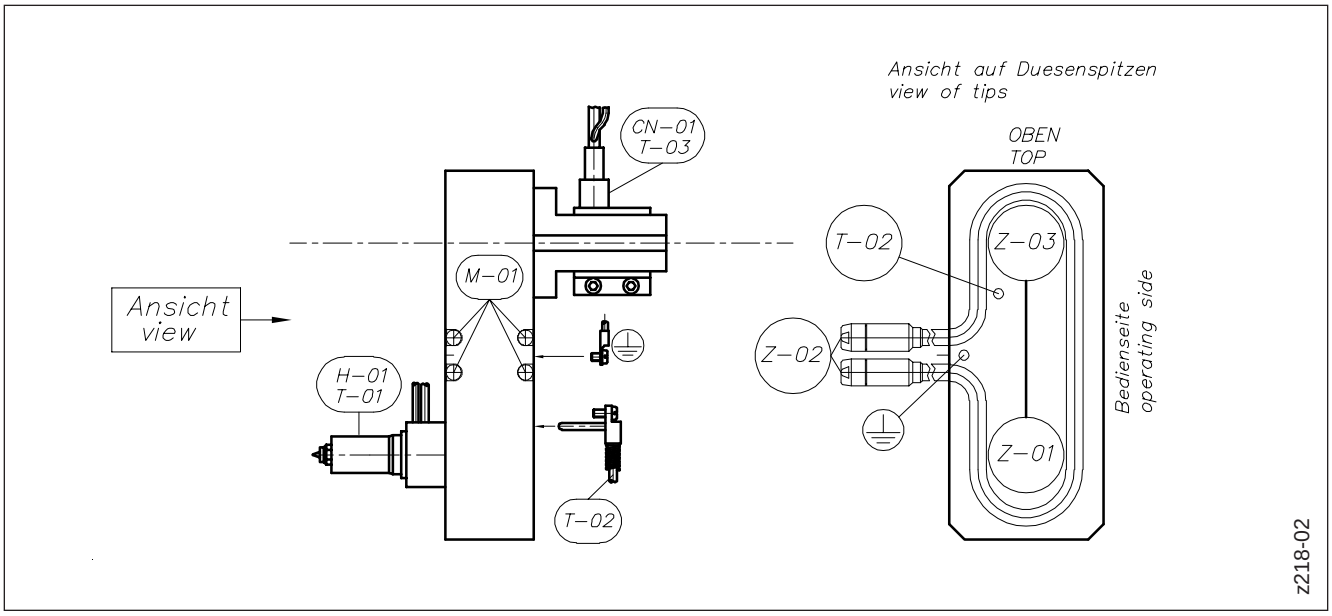

Picture 78: Wiring of standard-1-drop hot runner systems

Key to the symbols	
Z	Control zone
H	Heater nozzle
M	Heater manifold
CN	Heater band sprue bush
T	Thermocouple
PE ⏚	Protective earth conductor
L	Phase conductor
N	Neutral conductor
●	male
○	female

	230 V			Thermo		
Control zone Z	Plug 230 V / 10-pin No. = X...		Contact L / N	Plug thermo / 10-pin No. = X...		Contact + / -
Z-01	X-1.1	H-01	1 / 6	X-1.2	T-01	1 / 6
Z-02	X-1.1	M-01	2 / 7	X-1.2	T-02	2 / 7
Z-03	X-1.1	CN-01	3 / 8	X-1.2	T-03	3 / 8

or

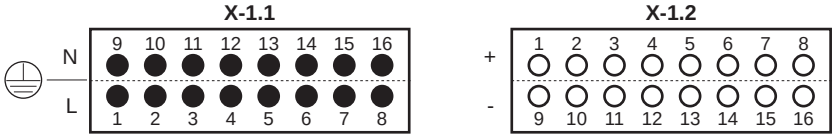

	230 V			Thermo		
Control zone Z	Plug 230 V / 16-pin No. = X...		Contact L / N	Plug thermo / 16-pin No. = X...		Contact + / -
Z-01	X-1.1	H-01	1 / 9	X-1.2	T-01	1 / 9
Z-02	X-1.1	M-01	2 / 10	X-1.2	T-02	2 / 10
Z-03	X-1.1	CN-01	3 / 11	X-1.2	T-03	3 / 11

5.7.4 Wiring of 2-drop hot runner systems

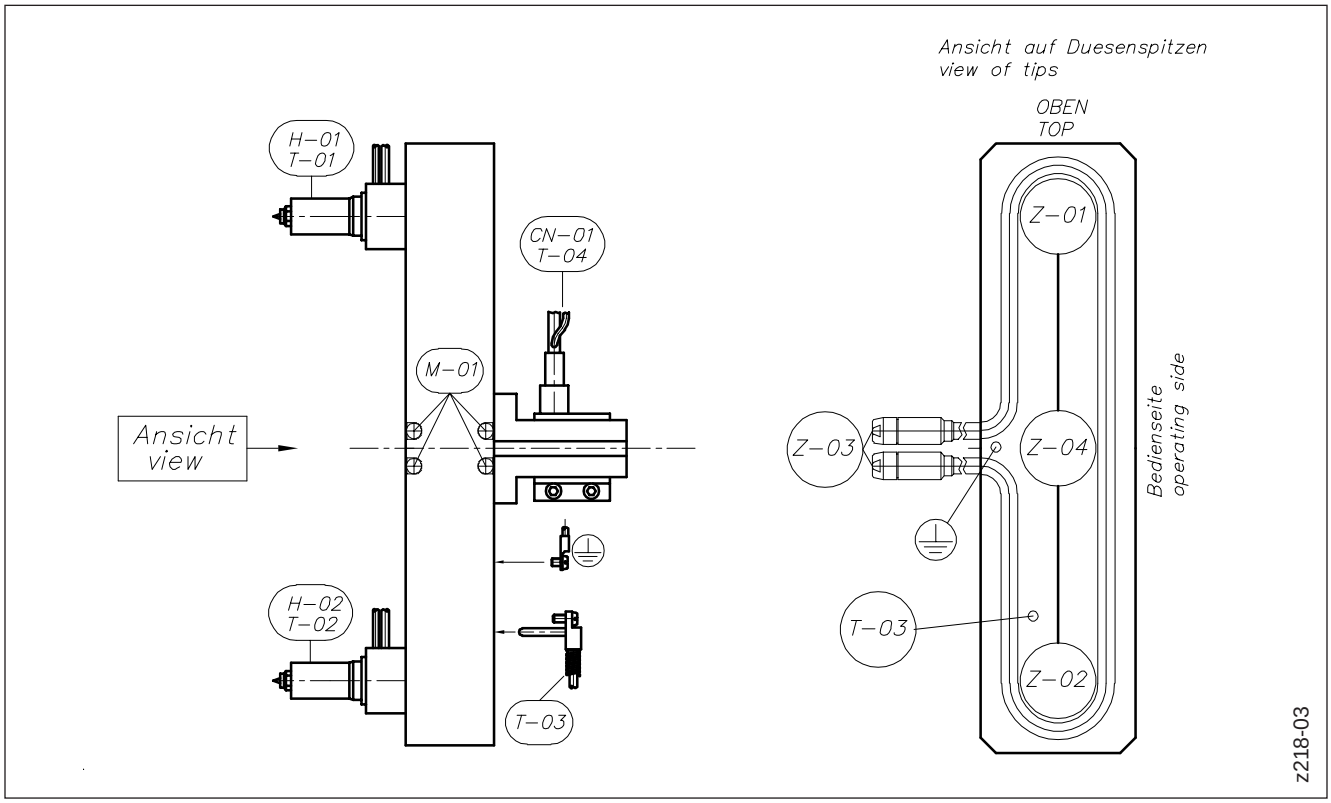

Picture 79: Wiring of standard-2-drop hot runner systems

Key to the symbols	
Z	Control zone
H	Heater nozzle
M	Heater manifold
CN	Heater band sprue bush
T	Thermocouple
PE ⏚	Protective earth conductor
L	Phase conductor
N	Neutral conductor
●	male
○	female

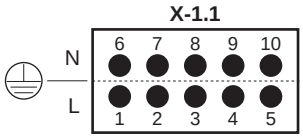

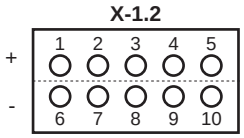

	230 V			Thermo		
Control zone Z	Plug 230 V / 10-pin No. = X...		Contact L / N	Plug thermo / 10-pin No. = X...		Contact + / -
Z-01	X-1.1	H-01	1 / 6	X-1.2	T-01	1 / 6
Z-02	X-1.1	H-02	2 / 7	X-1.2	T-02	2 / 7
Z-03	X-1.1	M-01	3 / 8	X-1.2	T-03	3 / 8
Z-04	X-1.1	CN-01	4 / 9	X-1.2	T-04	4 / 9

or

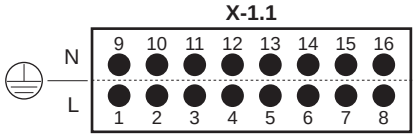

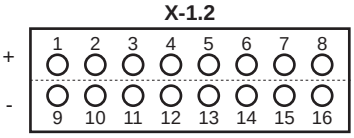

	230 V			Thermo		
Control zone Z	Plug 230 V / 16-pin No. = X...		Contact L / N	Plug thermo / 16-pin No. = X...		Contact + / -
Z-01	X-1.1	H-01	1 / 9	X-1.2	T-01	1 / 9
Z-02	X-1.1	H-02	2 / 10	X-1.2	T-02	2 / 10
Z-03	X-1.1	M-01	3 / 11	X-1.2	T-03	3 / 11
Z-04	X-1.1	CN-01	4 / 12	X-1.2	T-04	4 / 12

5.7.5 Wiring of 4-drop hot runner systems (manifold with 2 control zones)

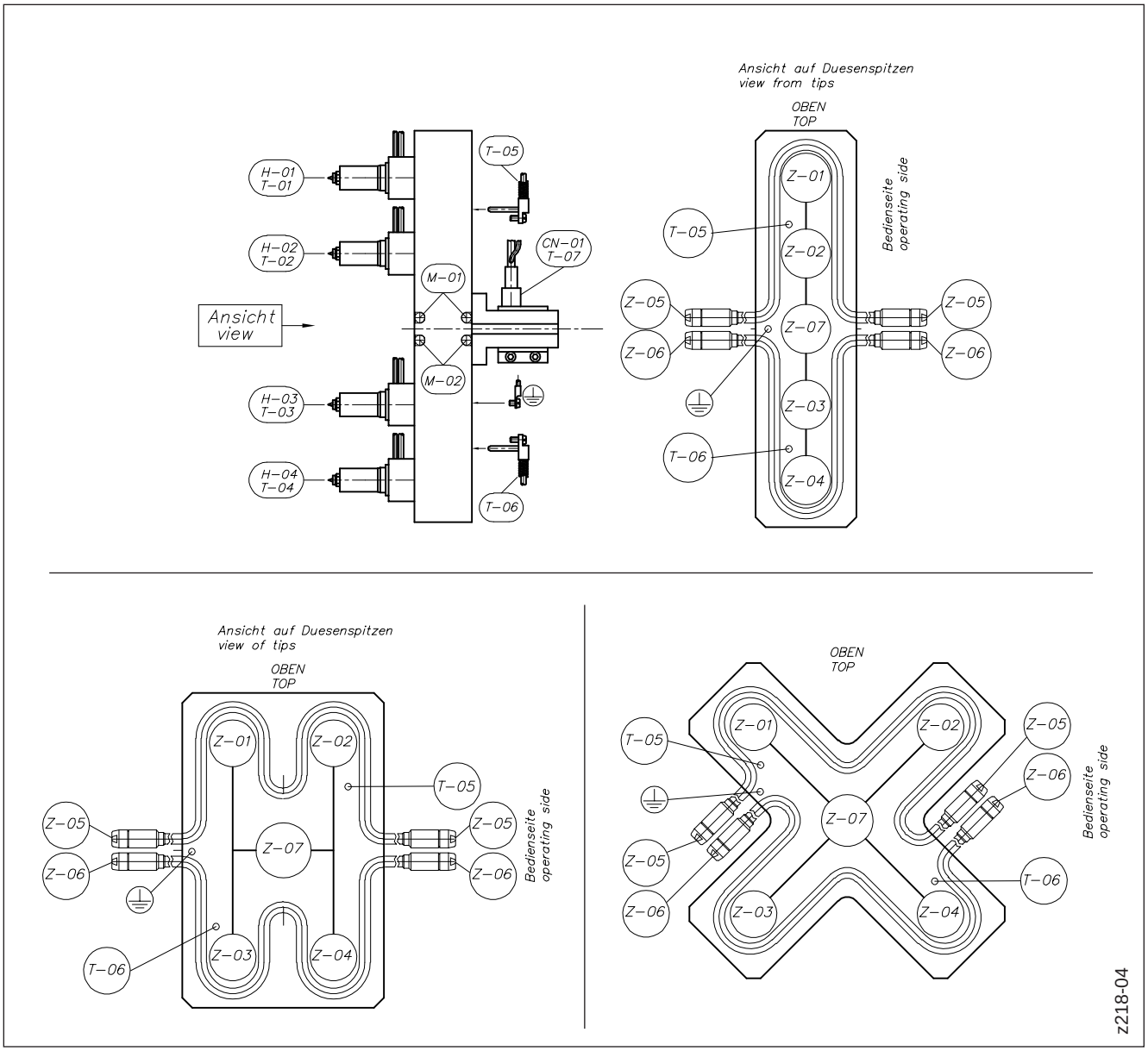

Picture 80: Wiring of standard-4-drop hot runner systems (manifold with two control zones)

Key to the symbols	
Z	Control zone
H	Heater nozzle
M	Heater manifold
CN	Heater band sprue bush
T	Thermocouple
PE ⏚	Protective earth conductor
L	Phase conductor
N	Neutral conductor
●	male
○	female

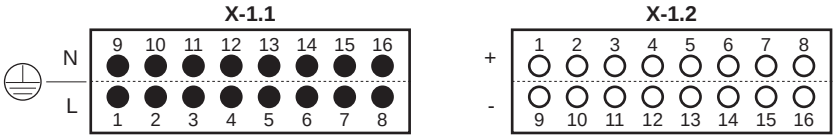

	230 V			Thermo		
Control zone Z	Plug 230 V / 16-pin No. = X...		Contact L / N	Plug thermo / 16-pin No. = X...		Contact + / -
Z-01	X-1.1	H-01	1 / 9	X-1.2	T-01	1 / 9
Z-02	X-1.1	H-02	2 / 10	X-1.2	T-02	2 / 10
Z-03	X-1.1	H-03	3 / 11	X-1.2	T-03	3 / 11
Z-04	X-1.1	H-04	4 / 12	X-1.2	T-04	4 / 12
Z-05	X-1.1	M-01	5 / 13	X-1.2	T-05	5 / 13
Z-06	X-1.1	M-02	6 / 14	X-1.2	T-06	6 / 14
Z-07	X-1.1	CN-01	7 / 15	X-1.2	T-07	7 / 15

5.7.6 Wiring of 6-drop hot runner systems (manifold with 2 control zones)

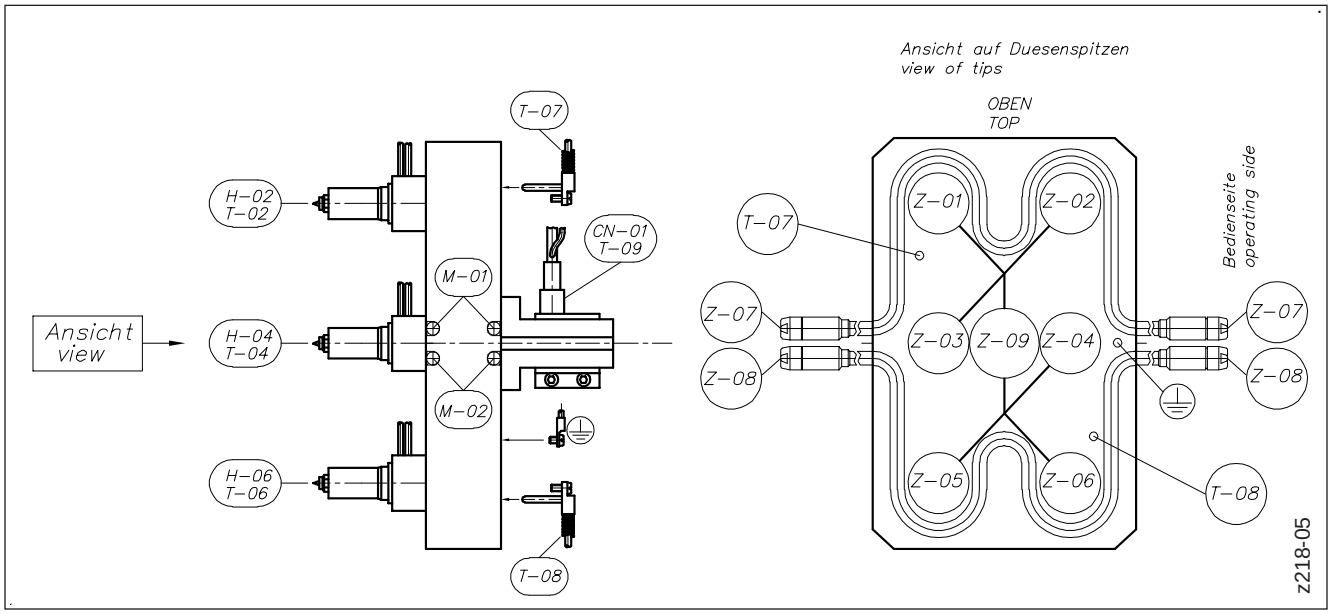

Picture 81: Wiring of standard-6-drop hot runner systems (manifold with two control zones)

Key to the symbols	
Z	Control zone
H	Heater nozzle
M	Heater manifold
CN	Heater band sprue bush
T	Thermocouple
PE ⏚	Protective earth conductor
L	Phase conductor
N	Neutral conductor
●	male
○	female

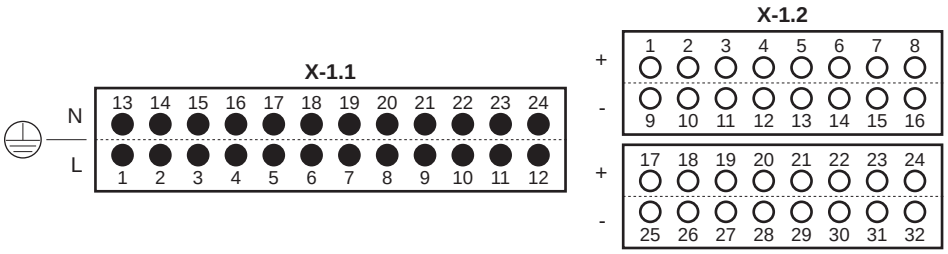

	230 V			Thermo		
Control zone Z	Plug 230 V / 24-pin No. = X...		Contact L / N	Plug thermo / 32-pin No. = X...		Contact + / -
Z-01	X-1.1	H-01	1 / 13	X-1.2	T-01	1 / 9
Z-02	X-1.1	H-02	2 / 14	X-1.2	T-02	2 / 10
Z-03	X-1.1	H-03	3 / 15	X-1.2	T-03	3 / 11
Z-04	X-1.1	H-04	4 / 16	X-1.2	T-04	4 / 12
Z-05	X-1.1	H-05	5 / 17	X-1.2	T-05	5 / 13
Z-06	X-1.1	H-06	6 / 18	X-1.2	T-06	6 / 14
Z-07	X-1.1	M-01	7 / 19	X-1.2	T-07	7 / 15
Z-08	X-1.1	M-02	8 / 20	X-1.2	T-08	8 / 16
Z-09	X-1.1	CN-01	9 / 21	X-1.2	T-09	17 / 25

5.7.7 Wiring of 8-drop hot runner systems (manifold with 2 control zones)

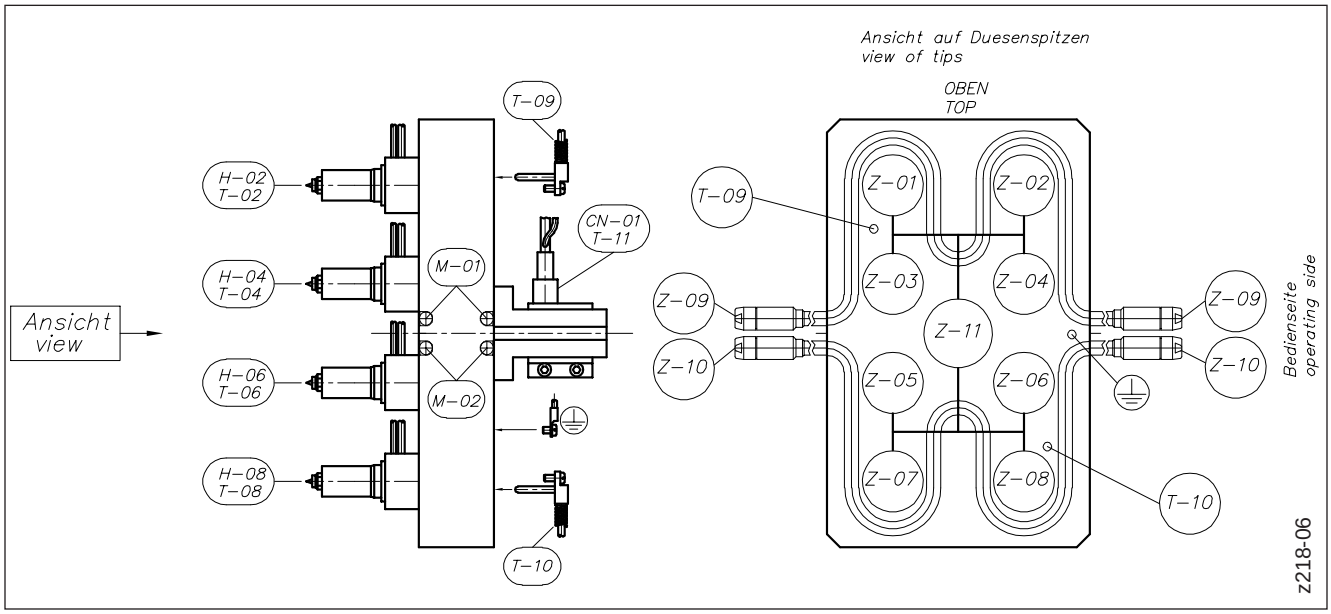

Picture 82: Wiring of standard-8-drop hot runner systems (manifold with two control zones)

Key to the symbols	
Z	Control zone
H	Heater nozzle
M	Heater manifold
CN	Heater band sprue bush
T	Thermocouple
PE ⏚	Protective earth conductor
L	Phase conductor
N	Neutral conductor
●	male
○	female

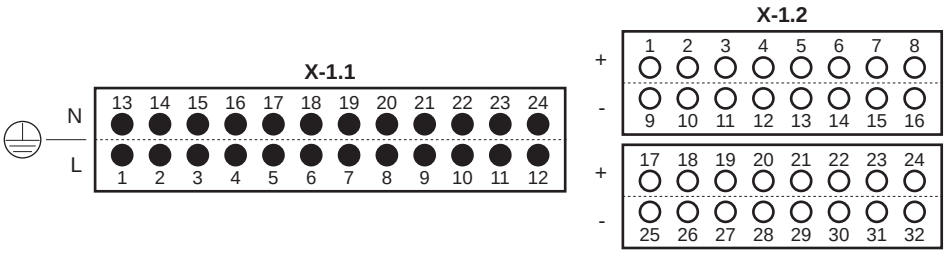

	230 V			Thermo		
Control zone Z	Plug 230 V / 24-pin No. = X...		Contact L / N	Plug thermo / 32-pin No. = X...		Contact + / -
Z-01	X-1.1	H-01	1 / 13	X-1.2	T-01	1 / 9
Z-02	X-1.1	H-02	2 / 14	X-1.2	T-02	2 / 10
Z-03	X-1.1	H-03	3 / 15	X-1.2	T-03	3 / 11
Z-04	X-1.1	H-04	4 / 16	X-1.2	T-04	4 / 12
Z-05	X-1.1	H-05	5 / 17	X-1.2	T-05	5 / 13
Z-06	X-1.1	H-06	6 / 18	X-1.2	T-06	6 / 14
Z-07	X-1.1	H-07	7 / 19	X-1.2	T-07	7 / 15
Z-08	X-1.1	H-08	8 / 20	X-1.2	T-08	8 / 16
Z-09	X-1.1	M-01	9 / 21	X-1.2	T-09	17 / 25
Z-10	X-1.1	M-02	10 / 22	X-1.2	T-10	18 / 26
Z-11	X-1.1	CN-01	11 / 23	X-1.2	T-11	19 / 27

5.7.8 Wiring of 8-drop hot runner systems (manifold with 4 control zones)

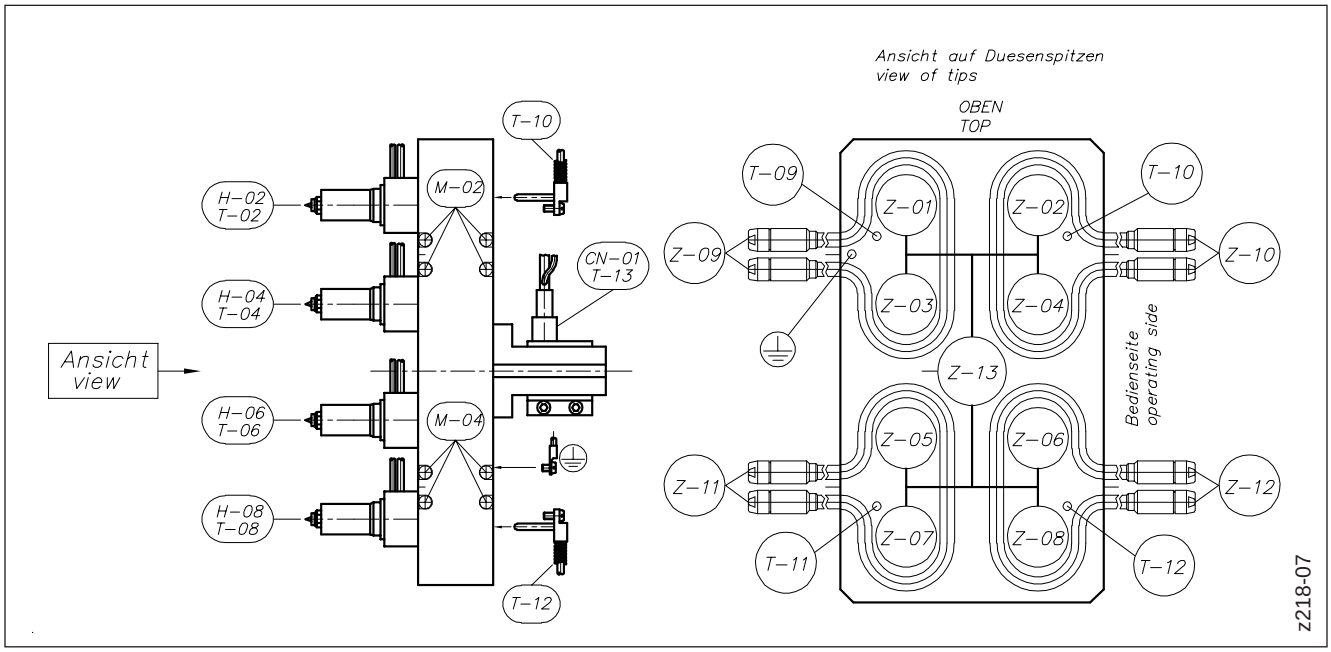

Picture 83: Wiring of standard-8-drop hot runner systems (manifold with four control zones)

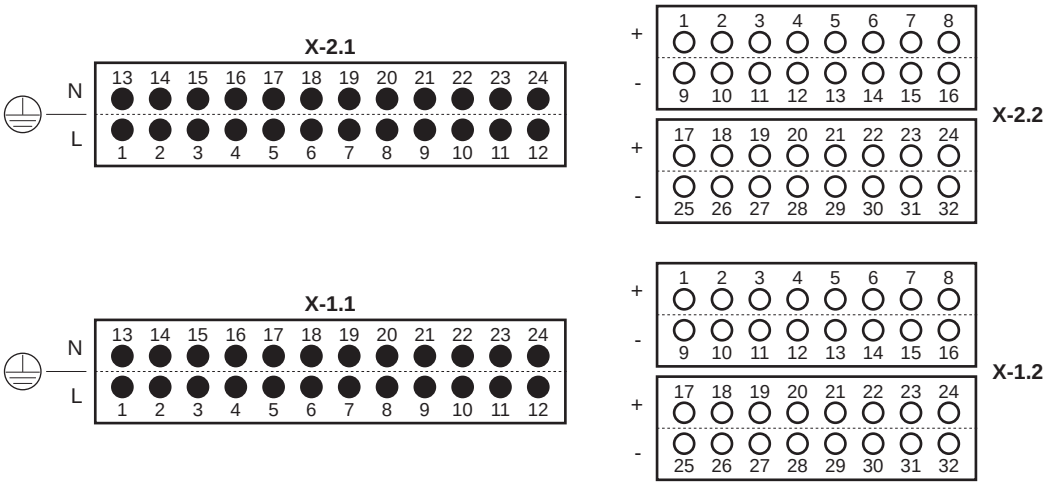

Key to the symbols	
Z	Control zone
H	Heater nozzle
M	Heater manifold
CN	Heater band sprue bush
T	Thermocouple
PE ⏚	Protective earth conductor
L	Phase conductor
N	Neutral conductor
●	male
○	female

	230 V			Thermo		
Control zone Z	Plug 230 V / 24-pin No. = X...		Contact L / N	Plug thermo / 32-pin No. = X...		Contact + / -
Z-01	X-1.1	H-01	1 / 13	X-1.2	T-01	1 / 9
Z-02	X-1.1	H-02	2 / 14	X-1.2	T-02	2 / 10
Z-03	X-1.1	H-03	3 / 15	X-1.2	T-03	3 / 11
Z-04	X-1.1	H-04	4 / 16	X-1.2	T-04	4 / 12
Z-05	X-1.1	H-05	5 / 17	X-1.2	T-05	5 / 13
Z-06	X-1.1	H-06	6 / 18	X-1.2	T-06	6 / 14
Z-07	X-1.1	H-07	7 / 19	X-1.2	T-07	7 / 15
Z-08	X-1.1	H-08	8 / 20	X-1.2	T-08	8 / 16
Z-09	X-1.1	M-01	9 / 21	X-1.2	T-09	17 / 25
Z-10	X-1.1	M-02	10 / 22	X-1.2	T-10	18 / 26
Z-11	X-1.1	M-03	11 / 23	X-1.2	T-11	19 / 27
Z-12	X-1.1	M-04	12 / 24	X-1.2	T-12	20 / 28
Z-13	X-2.1	CN-01	1 / 13	X-2.2	T-13	1 / 9

5.8 Checks after installation

To be checked in cold condition

- Bores and connections for media (e.g. cooling circuits, hydraulic circuits) (optical check)
- Allocation of wiring according to the wiring scheme (see order specific documents)
- Resistance of the protective earth conductor
- Insulation resistances of the heating zones
- Check of cooling (function, correct piping): Are all components that require cooling supplied with water (is the flow rate sufficient)?

CAUTION!

PPE

Respect operating temperatures

For all further checks the HPS III hot runner system must be heated to operating temperature in order to avoid damage to hot runner components.

Each hot runner system is individually designed for the material to be processed. Therefore, the specified operating temperatures must be observed. The temperature difference ΔT between hot runner temperature T_{HK} (processing temperature) and mould temperature T_{WZ}, must be strictly adhered to.

- Non-observance may cause an escape of melt inside the mould (ΔT too low) or damage to components (ΔT too large).

Ckeck of heaters by heating the HPS III hot runner system to operating temperature

- Switch on the mould cooling.
- Check if the thermocouple and power connections are allocated correctly by heating up each zone separately (for a short time)
- Check response of the respective thermocouple
- When using a EWIKON controller this procedure can be automatically carried out by using the diagnosis function.

To be checked in heated condition (operating temperature)

- Leak tightness and function of drive units (hydraulic fluid, pressurised air) by repeatedly moving the valve pin to the end positions in manual mode while the mould is opened.
- Valve pin position (move valve pin to end position „closed“).
- Valve pin function (move valve pin repeatedly into end positions „open“ and „closed“).
- Leak tightness and function of mould cooling.

6. Start-up and instructions for operation

6.1 Safety instructions

WARNING!

PPE

Unwanted sudden escape of melt caused by thermal degradation or gas release of plastic material

Unwanted escape of melt caused by different thermal expansion of materials due to temperature differences

Heavy burns to body and extremities.

- Before operation the system must be heated through for at least 3-5 min.
- Only process materials which are approved for use with the system.
- The safety devices of the injection moulding machine must be active and working

HAZARD!

PPE

Insufficient protective conductor connection to the injection moulding machine

Risk of deadly electric shock or severe injuries due to live components.

The operator must ensure that during startup of hot runner single tips or hot runner systems all electrical system components have been wired to to the protective conductor system of the injection moulding machine or are protected by equivalent safety measures before applying electric voltage. When applying electric voltage to systems or to system components beyond specified normal operation, sufficient ground earth connection or equivalent safety measures must be ensured for each component.

Raised injection pressure

The system is designed for an injection pressure of 2000 bar. When the cavity pressure is too high (e.g. by overpacking a cavity without limiting the injection pressure) components of the hot runner system may break and hot plastic melt can escape.

Injection moulding processes must only be carried out with maximum pressures of 2000 bar. If the process requires higher pressures a written permission of EWIKON Heißkanalsysteme GmbH is needed.

CAUTION!

PPE

A HPS III hot runner system must only be started up when used as intended within an injection mould.

Respect operating temperatures

For all further checks the HPS III hot runner system must be heated to operating temperature in order to avoid damage to hot runner components.

Each hot runner system is individually designed for the material to be processed. Therefore, the specified operating temperatures must be observed. The temperature difference ΔT between hot runner temperature T_{HK} (processing temperature) and mould temperature T_{WZ}, must be strictly adhered to.

- Non-observance may cause an escape of melt inside the mould (ΔT too low) or damage to components (ΔT too large).

Improper processing of thermoplastics in the injection moulding process

The guidelines of the material manufacturer such as processing temperature and mould temperature must be observed. Otherwise the moulded parts can be faulty or the hot runner system can be damaged.

Risk of injuries during installation

During installation the following injuries may occur:

- Cut injuries due to sharp edges.
- Crushing of fingers or hand.

Leakage during operation

Using a wrong combination of radii of sprue bush and machine nozzle can result in unwanted escape of melt during the injection moulding process.

Observe system temperatures during installation / disassembly

Damage to the melt seal.

- Disassemble contour plate in cold condition.

NOTE!

When processing materials with flame retardant additives or glass fibre reinforcements we recommend to purge the hot runner system with natural material of the same type without additives after end of production. This will facilitate the next start-up.

When conducting colour and material changes it is advantageous if the contour plate can be separated from the stationary mould half (nozzle side). Thus, the nozzle tips become accessible for cleaning and maintenance purposes. This is required when a colour change can not be successfully carried out by just purging the system.

6.2 Requirements for operation

- The radius of the sprue bush (R) or the radius of the contact surface of a single tip respectively has to be adapted to the radius of the machine nozzle (R_M) (recommendation: $R > R_M + 1$).
- For a better decompression the bore in the machine nozzle has to be adapted to the bore in the sprue bush or the single tip respectively (machine nozzle bore max. 1 mm smaller).
- The injection unit stays attached to the mould during cycle.
- Connect power cable, thermocouple collective cable and ground cable.
- Check if the thermocouple and power connections are allocated correctly by heating up each zone separately (for a short time).
- Before start-up valve gate systems have to be checked on tightness of water, oil and compressed air connections.
- In order to clearly identify the hot runner system attach the type plate with the order number prominently to the operator side of the mould.

NOTE!

When operating single tips the maximum contact pressure of the injection unit must be obeyed!

Type of single tip	Flow channel diameter [mm]	Max. contact pressure [KN]
HPS III-SXE / HPS III-NVI	6	30
	9	50
	12	90
	18	90
HPS III-MHR 100/200 / HPS III-MHL 100/200		30
HPS III-MHR 111/112		50

6.3 Start-up and operation of hot runner systems with HPS III-MH nozzles

6.3.1 First-time start-up and filling of a hot runner system with HPS III-MH nozzles with heat conductive tips

- Switch on the mould cooling.
- Switch on the hot runner and let the humidity from the heaters dry out at a temperature between 100 °C and 120 °C for approx. 10 minutes (sequential start /compound heating mode of the controller).
- Heat the system to decreasing temperature (processing temperature -50 °C) by using the compound heating mode.
- If the hot runner controller does not feature a compound heating function heat the manifold first, then the nozzle adapter and at last the nozzle body.
- When decreasing temperature is reached tighten the screws of the clamping cover with half of the matching tightening torque (see chapter „9.3 Tightening torques for clamping covers of HPS III-MH nozzles“).
- Heat complete system to processing temperature.
- Check the clamping cover screws for correct tightening torque (see chapter „9.3 Tightening torques for clamping covers of HPS III-MH nozzles“).
- Install heat protective cover (provided by the customer).
- Make sure that there is a sufficient barrel pressure. Without that leakage might occur between machine nozzle and mould.
- Fill the system with reduced pressure and injection speed (350 bar).
- Let the system heat through for 3-5 minutes.
- Start moulding.

6.3.2 Start-up of already filled hot runner systems with HPS III-MH nozzles with heat conductive tips

- Switch on the mould cooling.
- Switch on the hot runner and let the humidity from the heaters dry out at a temperature between 100 °C and 120 °C for approx. 10 minutes (sequential start /compound heating mode of the controller).
- Heat the system to decreasing temperature (processing temperature -50 °C) by using the compound heating mode.
- If the hot runner controller does not feature a compound heating function heat the manifold first, then the nozzle adapter and at last the nozzle body. By doing this the system is decompressed in backward direction and no melt can escape from the lateral gates.
- Heat complete system to processing temperature.
- Make sure that there is a sufficient barrel pressure. Without that leakage might occur between machine nozzle and mould.
- Let the system heat through for 3-5 minutes.
- When material melts at the sprue bush remove cold slug and purge machine barrel – then start up mould.
- Start moulding.

6.3.3 First-time start-up and filling of a hot runner system with HPS III-MH valve gate nozzles

NOTE!

Load on valve pin during operation

In order to reduce the load on the valve pin during operation to a minimum the pressure for hydraulic drives hould not exceed 50 bar. For normal operation EWIKON recommends approx. 30 bar.

For valve gate systems with pneumatic drives compressed air with a pressure of 6 - 8 bar should be provided (dry, dehumidified air).

- Make sure that the drive unit of the valve gate system is **depressurised**!
- Switch on the mould cooling.
- Switch on the hot runner and let the humidity from the heaters dry out at a temperature between 100 °C and 120 °C for approx. 10 minutes (sequential start /compound heating mode of the controller).
- Heat the system to decreasing temperature (processing temperature -50 °C) by using the compound heating mode.
- If the hot runner controller does not feature a compound heating function heat the manifold first, then the nozzle adapter and at last the nozzle body.
- When decreasing temperature is reached tighten the screws of the clamping cover with half of the matching tightening torque (see chapter „9.3 Tightening torques for clamping covers of HPS III-MH nozzles“).
- Heat complete system to processing temperature.
- Let the system heat through for a minimum of 10 minutes.
- Check the clamping cover screws for correct tightening torque (see chapter „9.3 Tightening torques for clamping covers of HPS III-MH nozzles“).
- Connect the drive units of the valve gate system to the supply lines.
- Check the valve pin function (use reduced pressure if possible).
- End the functional test with the valve pins in "closed" position.
- Install heat protective cover (provided by the customer).
- Make sure that there is a sufficient barrel pressure.
  Without that leakage might occur between machine nozzle and mould.
- Fill the system with reduced pressure and injection speed (350 bar).
- Let the system heat through for 3-5 minutes.
- Start moulding.

6.3.4 Start-up of already filled hot runner systems with HPS III-MH valve gate nozzles

NOTE!

Load on valve pin during operation

In order to reduce the load on the valve pin during operation to a minimum the pressure for hydraulic drives hould not exceed 50 bar. For normal operation EWIKON recommends approx. 30 bar.

For valve gate systems with pneumatic drives compressed air with a pressure of 6 - 8 bar should be provided (dry, dehumidified air).

- Make sure that the drive unit of the valve gate system is depressurised!
- Switch on the mould cooling.
- Switch on the hot runner and let the humidity from the heaters dry out at a temperature between 100 °C and 120 °C for approx. 10 minutes (sequential start /compound heating mode of the controller).
- Heat the system to decreasing temperature (processing temperature -50 °C) by using the compound heating mode.
- If the hot runner controller does not feature a compound heating function heat the manifold first, then the nozzle adapter and at last the nozzle body. By doing this the system is decompressed in backward direction and no melt can escape from the lateral gates.
- Heat complete system to processing temperature.
- Let the system heat through for a minimum of 10 minutes.
- Connect the drive units of the valve gate system to the supply lines.
- Check the valve pin function (use reduced pressure if possible).
- End the functional test with the valve pins in "closed" position.
- When material melts at the sprue bush remove cold slug and purge machine barrel – then start up mould.
- Start moulding.

6.3.5 Colour and material changes

1. In order to successfully carry out a colour change the hot runner system needs to be filled with natural material.
2. Fill the hot runner system as described under „6.3.1 First-time start-up and filling of a hot runner system with HPS III-MH nozzles with heat conductive tips“ or „6.3.3 First-time start-up and filling of a hot runner system with HPS III-MH valve gate nozzles“.
3. Mould articles using the first colour.
4. For the colour change increase barrel temperature by 20 - 40 °C and change to natural material.
5. Purge the barrel with natural material first, then purge the hot runner system and the barrel together with natural material.
6. When approx. 95% of the purged material contains of natural material, increase the temperature of the hot runner by 30 - 50 °C and continue to purge with natural material until no further improvement can be achieved.
7. Set temperature back to standard settings.
8. Start moulding with new colour.

NOTE!

If despite of intensive purging old material still remains visible in the moulded part (visible flow marks on the surface or inside transparent parts) the so called „cap“ the area of frozen plastic between nozzle tip and gate must be removed. Deinstall and clean the nozzle tips as described in chapter „7.4 Deinstallation / installation of tip inserts for HPS III-MH nozzles“.

6.3.6 Shutdown of a system with HPS III-MH nozzles (system / single tip / single cavity)

CAUTION!

Damage of system

- In case of heater failure of the nozzle adapter or the nozzle body stop moulding immediately! There is the risk of leakage due to missing thermal expansion in length of the nozzle.
- In case of broken valve pin shut down system immediately.

Shutdown of a system with HPS III-MH nozzles with heat conductive tips

- Draw back the machine nozzle and empty it completely.
- Switch off the hot runner.
- Leave the mould cooling switched on until the hot runner has reached a temperature <120° C.

Shutdown of a system with HPS III-MH valve gate nozzles

- Draw back the machine nozzle and empty it completely.
- Move the valve pins to "open" position.
- Switch of the hot runner.
- Leave the mould cooling switched on until the hot runner has reached a temperature <120° C.
- Depressurise the drive units of the valve gate system.

Shutdown of a single HPS III-MH nozzle with heat conductive tips (within a system)

- First decrease the temperature of the nozzle adapter by 50 °C to keep a sufficient preload between adapter and manifold.
- After that switch off the nozzle body heater or decrease the temperature of the nozzle body. Leave the heater of the nozzle adapter switched on.

Shutdown of a single HPS III-MH valve gate nozzle

- Decrease the nozzle temperature during the cycle to 30 °C below minimum processing temperature.

HPS III-MH nozzle with heat conductive tip inserts - shutdown of a single cavity

- A shutdown of single cavities is possible by using blind tips. The installation is carried out analogous to the installation of tip inserts as described in chapter „7.4 Deinstallation / installation of tip inserts for HPS III-MH nozzles“.
- Before installing a blind tip the gate area and all sealing surfaces must be thoroughly cleaned from plastic residues!

HPS III-MH valve gate nozzle - shutdown of a single cavity

- A shutdown of single cavities is possible by using blind tips. The installation is carried out analogous to the installation of tip inserts as described in chapter „7.4 Deinstallation / installation of tip inserts for HPS III-MH nozzles“.
- **Important: before deinstallation of the valve gate tip insert the valve pin must be moved to the revision position to avoid damage.**
- Deinstall the valve pin tip insert.
- Before installing a blind tip the gate area must be thoroughly cleaned from plastic residues in order to allow free movement of the valve pin.
- Before installing the blind tip all sealing surfaces mut be cleaned.

6.4 Possible malfunctions

6.4.1 Troubleshooting

Error	Possible cause / measure
Temperature of control zone exceeds set temperature	Check if the thermocouple and power connections are allocated correctly (heat up each zone separately).
Controller indicates broken thermocouple. No temperature value is displayed	Check thermocouple at the nozzle and/or thermocouple cable and controller respectively.
Thermocouple indicates a temperature value too low	Jammed thermocouple (temperature at the position in the mould where it is jammed is displayed, normally between mould and room temperature)
Thermocouple indicates wrong temperature value	Wrong type of thermocouple allocated in the controller
Thermocouple indicates value zero	Thermocouple reverse-poled, check thermocouple circuit
Burns on part in one cavity within a multi-cavity mould	Check nozzle (check and compare voltage values of all nozzles at a given current).
Short decrease or increase in temperature (temperature fluctuations)	• Power or thermo cables do not have proper contact. • Humidity in the heater
Nozzle does not heat up properly	• Check assembly geometry of the hot runner • Check resistance of the concerned heating zone and the thermocouple
Nozzles are drooling	• Temperature of nozzles too high • Increase the machine nozzle bore to 8 - 10 mm or increase decompression. • Gating point too large
Hot runner leakage	• No sufficient preload • Fits used for sealing of the system are not OK

Chart 11: Errors/Measures

7. Maintenance

7.1 Safety instructions

WARNING!

PPE

Hot surfaces / hot material (plastic melt)

Body burns by hot surfaces.

- Let the HPS III hot runner system and all components cool down completely to ambient temperature before starting maintenance work / disassembling. Never touch material leaking from the nozzle/the mould/the hot runner or the material inlet. Even material that seems to be cooled down already may still be hot inside the core and cause burns.
- Please make sure you wear your personal protective equipment (PPE)

7.2 Instructions for maintenance

NOTE!

Deferred, incomplete and improper maintenance work causes increased wear on single components of the HPS III hot runner system.

- Maintenance work must be carried out according to the maintenance schedule completely and within the indicated time intervals.
- Specific maintenance work must only be carried out by the qualified staff which is specified in the maintenance schedule.

In addition to the proper operation a careful maintenance is required in order to assure a long service life as well as a trouble-free function of the HPS III hot runner system. Beside inspection and repair this is a preventive measure to keep the HPS III hot runner system in perfect operating condition.

Please adhere to the time intervals indicated in the maintenance schedule.

It is recommended to document the maintenance work carried out in written form.

7.3 Maintenance schedule

Component/ function	Measure	Staff	Interval	Remark

Chart 12: Example for a maintenance schedule

7.4 Deinstallation / installation of tip inserts for HPS III-MH nozzles

7.4.1 Safety instructions

WARNING!

PPE

Hot surfaces

Body burns by hot surfaces.

CAUTION!

Pay attention to system temperature during installation/deinstallation

Damage to melt seal.

- The contour plate must only be installed and deinstalled when the hot runner system has cooled down.
- If the nozzle temperature is too high when the contour plate is installed/deinstalled the melt sealing can be damaged. This can cause leakage of the system.

Problems during deinstallation of nozzle tips

Damage of nozzle tips

- If a nozzle tip can not be screwed out use the controller to raise the nozzle temperature in steps.
- If the nozzle tip is still not screwable please contact the EWIKON customer servide. See chapter „7.7 Instructions for service and repair“.

Cleaning of threads and sealing surfaces

Damage to sealing surfaces during installation.

- Threads and sealing surfaces must be checked on cleanliness and free movement.
- Clean sealing surfaces and threads by using suitable cleaning tools (best directly after deinstallation of nozzle tip when the plastic is still viscous). Appropriate cleaning tools (brushes, scraper) must be made of materials which are softer than the steel of the hot runner components (soft metals or brass), also see chapter „5.3.1 Tools and operating materials“. Hereby, the sealing surfaces and threads can not be damaged during the cleaning process.

7.4.2 Deinstallation / installation of tip inserts for HPS III-MH nozzles

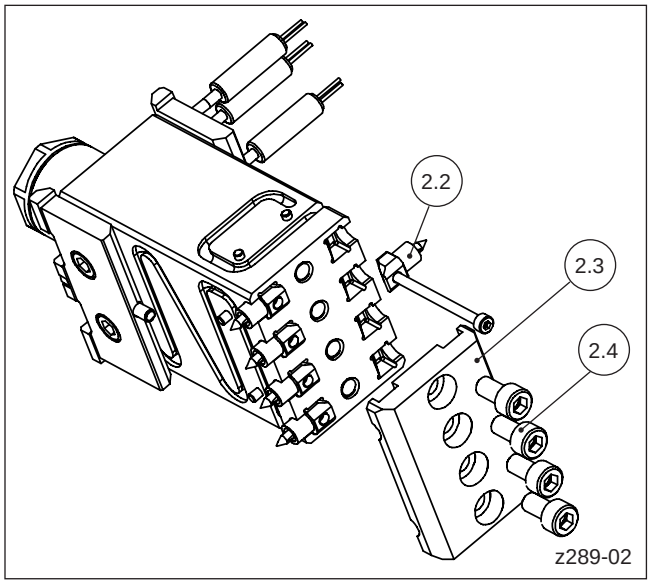

Picture 84: HPS III-MHL 100/200 nozzle

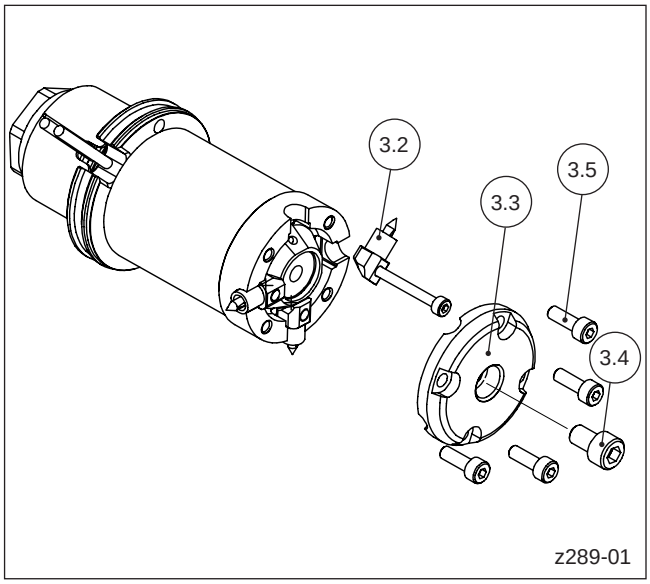

Picture 85: HPS III-MHR 100/200 nozzle

Pos. 2.2 Tip insert

Pos. 2.3 Clamping cover

Pos. 2.4 Socket head screws M6 (ISO 4762 - 12.9)

Pos. 3.2 Tip insert

Pos. 3.3 Clamping cover

Pos. 3.4 Central socket head screw M6 (ISO 4762 - 12.9)

Pos. 3.5 Socket head screws M4 (ISO 4762 - 12.9)

The deinstallation procedure for tip inserts described in the following is valid for all versions of HPS III-MH nozzles and single tips:

- HPS III-MHL100/200
- HPS III-MHR100/200
- HPS III-MHR111
- HPS III-MHR112
- HPS III-MHR122

7.4.3 Deinstallation of tip inserts

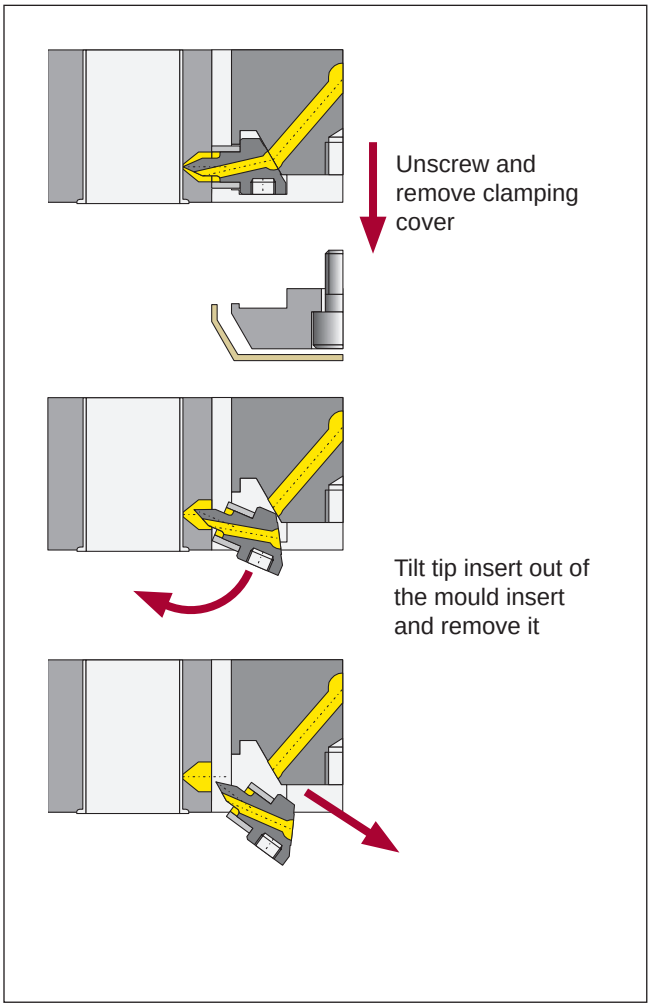

Picture 86: Deinstallation of tip inserts

WARNING!

Sharp edges and heavy components

- Cut injuries to body and extremities, mainly to the hands.
- Crushing of fingers or hand.

Hot surfaces

Burns to the body caused by hot surfaces.

1. Heat up nozzle to processing temperature (maximum nozzle temperature 350 °C / 662 °F) and warm up the mould until the mould temperature is reached. Keep the resulting ΔT (difference between processing and mould temperature) for at least 10 minutes to heat the gate area through. To avoid a leaking out of melted plastic from the nozzle body the temperature can be minimally decreased if necessary. At any time the plastic must be elastic enough to deinstall the tip insert without damage and increased effort. This must be checked for each individual case before deinstallation.
2. Deinstall heat protective cover (if installed).
3. Deinstall clamping cover according to the following procedure to avoid tilting:
   HPS III-MHL nozzles:
   Unscrew the socket head screws in the following order: 1 - 3 - 4 - 2.
   HPS III-MHR nozzles:
   Unscrew the socket head screws M4 crosswise, unscrew the central socket head screw M6 last.
4. Deinstall tip inserts according to the shown scheme. A threaded rod can be screwed into the tip insert as a deinstallation tool. Tilt tip inserts carefully to the outside and remove them.

7.4.4 Cleaning of tip inserts

WARNING!

Damage to the tip inserts

To avoid damage to the tip inserts while cleaning them never heat up the tip inserts to more than 350 °C (662 °F).

- It is not allowed to burn the resin around the tip inserts or to use gas flames

For most resins the plastic cap can be removed from the tip insert directly after the tip insert has been disassembled and when it is still hot.

Should this be not possible heat the plastic around the tip slowly by using a hot air gun until the plastic cap can be removed.

7.4.5 Installation of tip inserts

For a detailed description of the installation of tip inserts please see chapter „5. Installation“.

7.5 HPS III-MHL100/200 (valve gate) nozzles – exchange of thermocouple

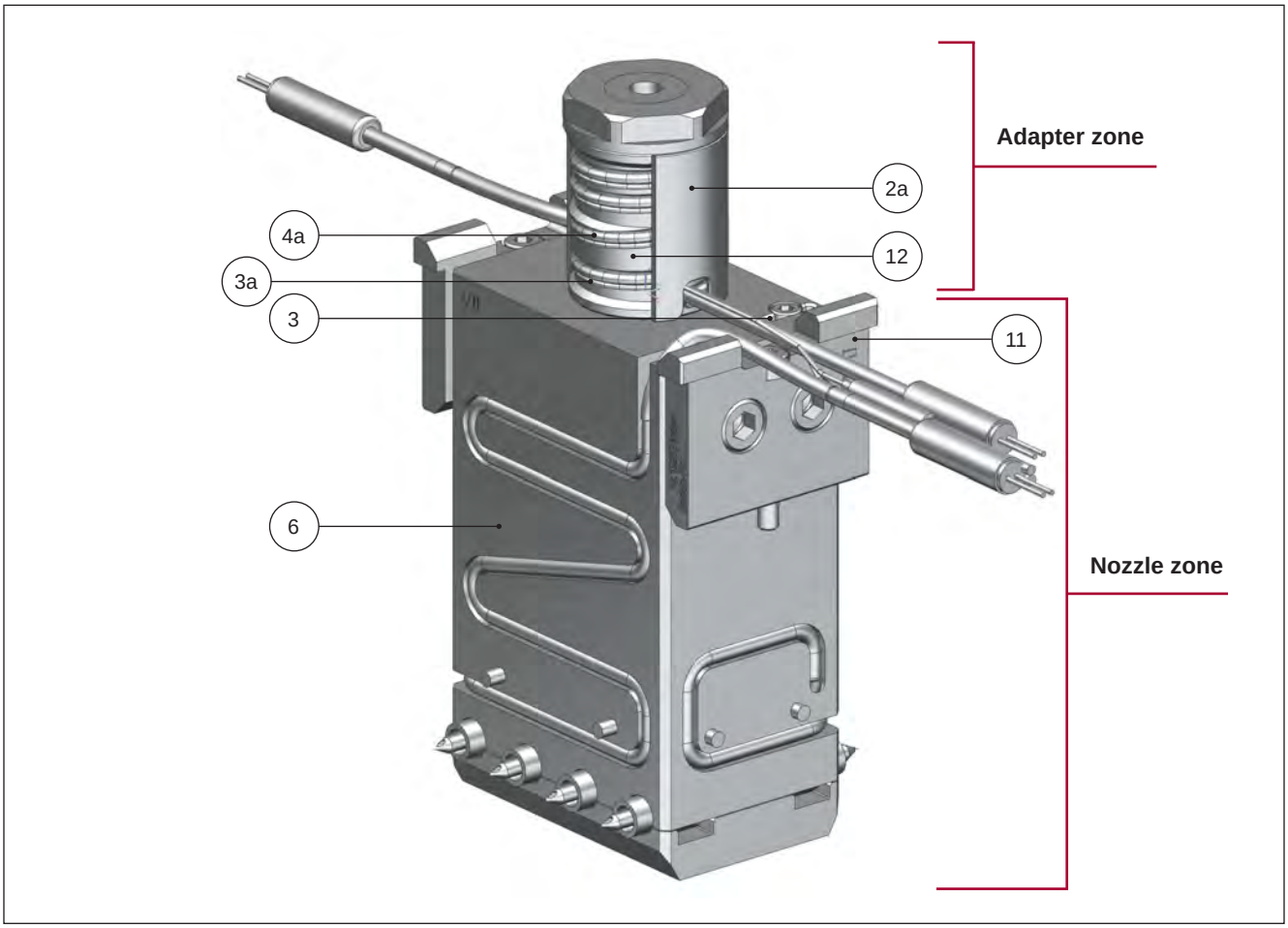

Picture 87: HPS III-MHL100 nozzle

Pos. 2a	Protective tube of adapter
Pos. 3	Thermocouple of nozzle
Pos. 3a	Thermocouple of adapter
Pos. 4a	Heater of adapter
Pos. 6	Nozzle body
Pos. 11	Side bars
Pos. 12	Heating element of adapter

HAZARD!

Connected power supply during installation

Risk of deadly electric shock or severe injuries due to live components.

- The hot runner system and the mould have to be disconnected from the voltage source during installation.

WARNING!

Sharp edges and heavy components

- Cut injuries to body and extremities, mainly to the hands.
- Crushing of fingers or hand.

Control of live components before installation

The electrical equipment of the hot runner system should be checked, especially those areas which will no longer be accessible after installation. Physical injuries such as an electric shock can be prevented that way.

Please check

- if cables are kinked or squeezed.
- if cable insulations are undamaged.

Check function of thermocouple

- Check resistance of thermocouple before and after installation to ensure that is has not be damaged during installation.

HPS III-MHL100/200 (valve gate) nozzles – exchange of thermocouple

Picture 88: Clamp the nozzle and unscrew the adapter

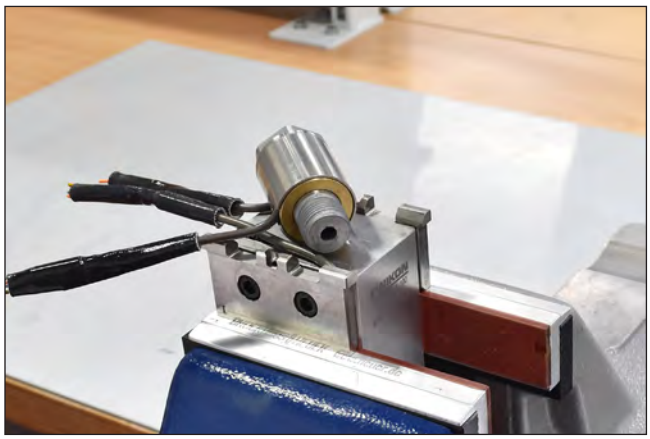

Picture 89: Disassembled adapter

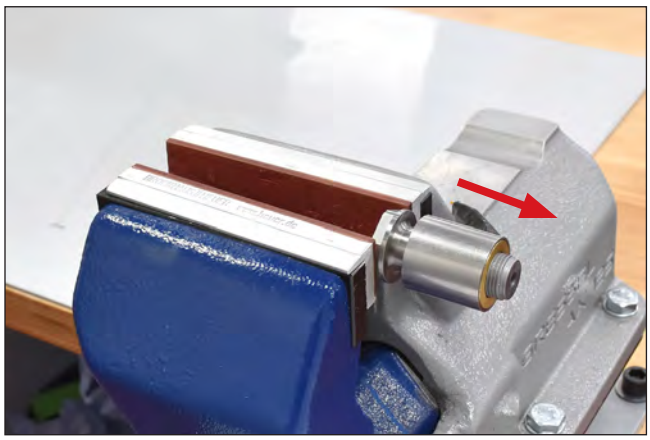

Picture 90: Pull off the heating element from the adapter

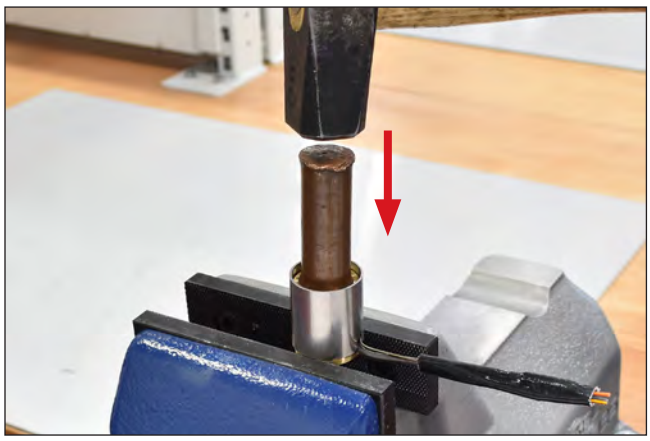

Picture 91: Disassemble the protective tube

Exchange of thermocouple in the adapter zone (HPS III-MHL nozzle)

1. Clamp the nozzle body in a vice. Unscrew and remove the adapter by using a ring spanner insert.

2. Pull of the heating element from the adapter.
   (Tipp: Coat the element with WD 40 penetrating oil and let it soak for a while. Use a suitable tool to pull off the heating element from the pressure tube in a slight rotary motion. Should this not be possible the heating element must be heated from the outside or by connecting the heater to a controller and heating up. Heat up quickly so that only the heating element is heated until it comes off the pressure tube. Heating up the whole assembly must be avoided.)

3. For disassembly of the protective tube from the heating element coat all parts with WD 40 penetrating oil. Place the assembly on an open clamp so that only the protective tube rests on the clamp and the heating element stands free. Use a copper drift to strike the heating element carefully out of the protective tube until it is easy to move. Clamp the protective tube carefully at its free end and pull the heating element out by hand.

HPS III-MHL100/200 (valve gate) nozzles – exchange of thermocouple

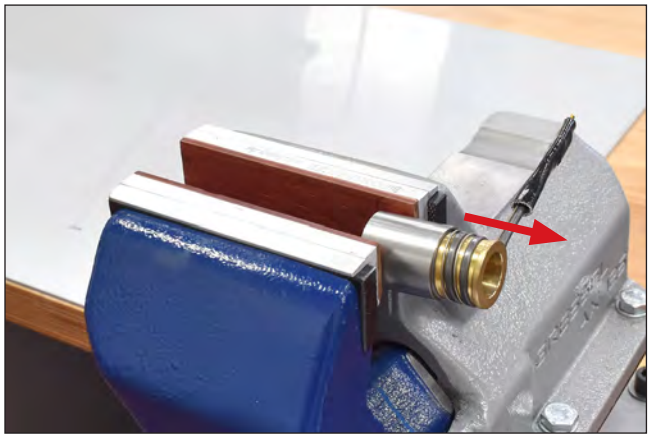

Picture 92: Clamp the protective tube pull out the heating element

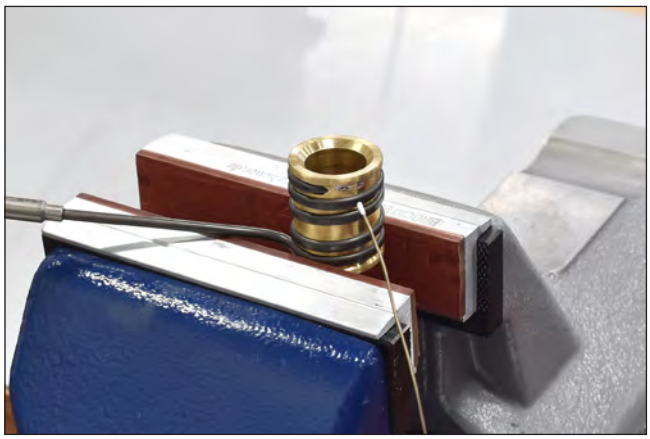

Picture 93: Coated tip of thermocouple

4. The adapter heater and the thermocouple are connected by a protective hose and cable ties. Disconnect the thermocouple, disassemble the broken thermocouple from the cutout and pull it out of the bore in the heating element.
5. Coat the tip of the new thermocouple with heat transferring paste (see chapter „5.3.1 Tools and operating materials“) and insert it into the bore in the heating element as far as it will go.

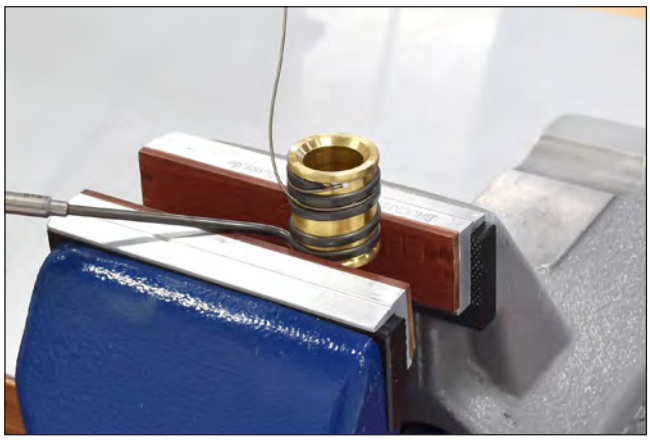

Picture 94: Installation of the new thermocouple

6. Bend the thermocouple carefully and wind it along the heater. At the same time slide the protective tube over the heating element to fix the already positioned part of the thermocouple.
7. Check functioning of the new thermocouple by heating up the heating element with a controller.

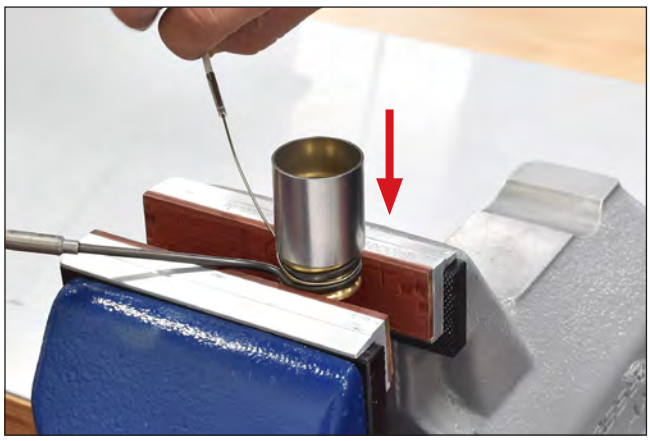

Picture 95: Installation of the protective tube

8. Install the heating element on the adapter.
9. Check the threads of adapter and nozzle body for damage, clean them with a soft wire brush and coat them with high temperature installation paste (see chapter „5.3.1 Tools and operating materials“). The front and spotting areas must be metallic bright.
10. Screw the adapter in by hand. Heat up the nozzle body to 200 °C by using a controller. Tighten the adapter with a torque of 100 Nm.
11. For notes for installation of the nozzle please refer to chapter „5.6 Installation of HPS III hot runner systems for direct side gating“.

HPS III-MHL100/200 (valve gate) nozzles – exchange of thermocouple

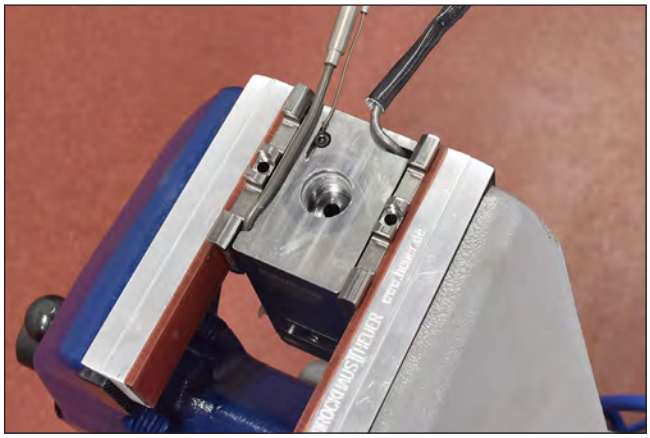

Picture 96: Clamp the nozzle, unscrew socket head screw

Exchange of thermocouple in the nozzle zone (HPS III-MHL nozzle)

1. Clamp the nozzle body at the side bars in a vice.

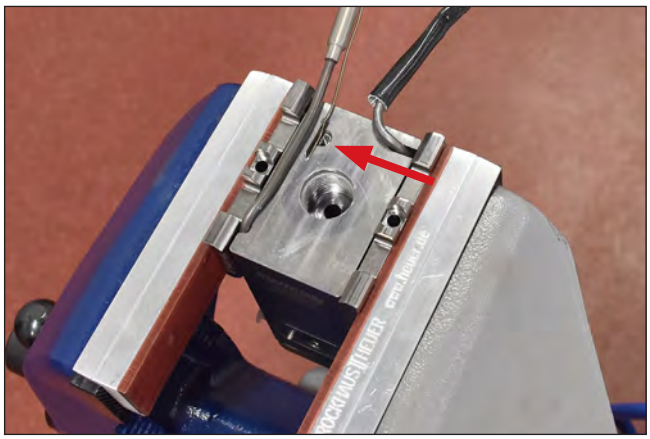

Picture 97: Socket head screw removed

2. The nozzle heater and the thermocouple are connected by a protective hose and cable ties. Disconnect the thermocouple and remove the protective hose.
3. Unscrew and remove the socket head screw (M3x5, ISO 4762).

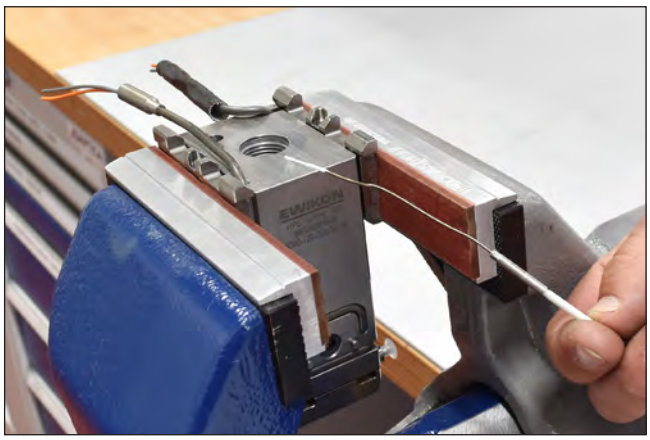

Picture 98: Coated tip of thermocouple

4. Disassemble the broken thermocouple from the cutout and pull it out of the bore in the nozzle.
5. Coat the tip of the new thermocouple with heat transferring paste (see chapter „5.3.1 Tools and operating materials“) and insert it into the bore in the nozzle as far as it will go.

Picture 99: Place thermocouple in the bore and fix it with screw

6. Place the thermocouple in the cutout and fix it with the socket head screw.
7. Check functioning of the new thermocouple by heating up the nozzle with a controller.
8. Place the thermocouple along the heater exit and fix it with a cable tie.
9. For notes for installation of the nozzle please refer to chapter „5.6 Installation of HPS III hot runner systems for direct side gating“.

7.6 HPS III-MHR100/200 (valve gate) nozzles – exchange of thermocouple

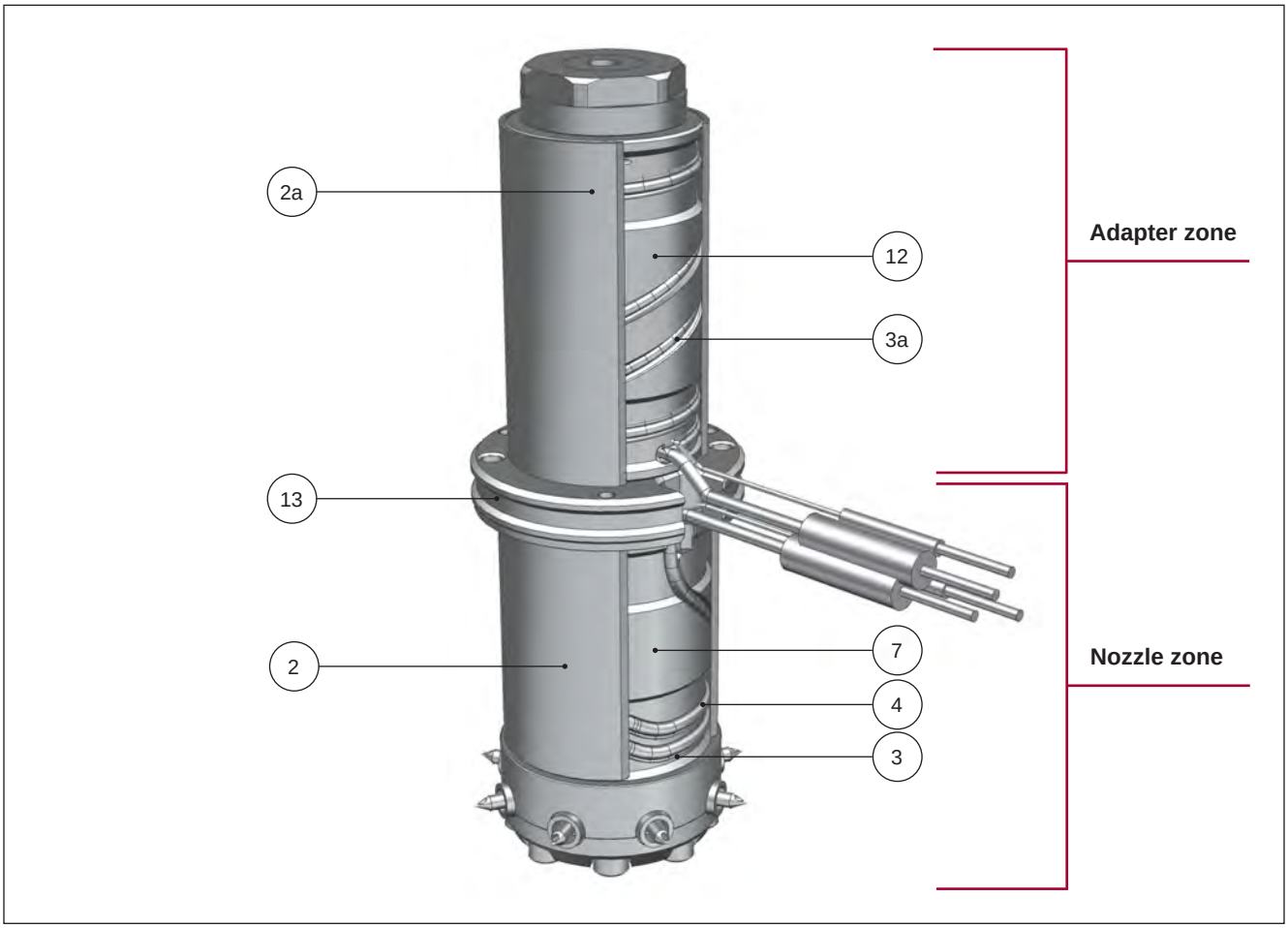

Picture 100: HPS III-MHL100 nozzle

Pos. 2	Protective tube of nozzle
Pos. 2a	Protective tube of adapter
Pos. 3	Thermocouple of nozzle
Pos. 3a	Thermocouple of adapter
Pos. 4	Heater of nozzle
Pos. 4a	Heater of adapter
Pos. 7	Nozzle body
Pos. 12	Heating element of adapter
Pos. 13	Retainer ring

HAZARD!

Connected power supply during installation

Risk of deadly electric shock or severe injuries due to live components.

- The hot runner system and the mould have to be disconnected from the voltage source during installation.

WARNING!

Sharp edges and heavy components

- Cut injuries to body and extremities, mainly to the hands.
- Crushing of fingers or hand.

Control of live components before installation

The electrical equipment of the hot runner system should be checked, especially those areas which will no longer be accessible after installation. Physical injuries such as an electric shock can be prevented that way.

Please check

- if cables are kinked or squeezed.
- if cable insulations are undamaged.

Check function of thermocouple

- Check resistance of thermocouple before and after installation to ensure that is has not be damaged during installation.

HPS III-MHR100/200 (valve gate) nozzles – exchange of thermocouple

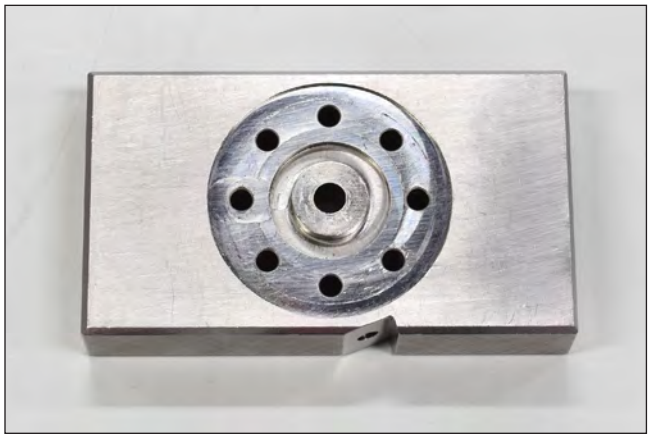

Picture 101: Clamping device for HPS III-MHR nozzles

NOTE!

For the thermocouple exchange a clamping device is available to secure the HPS III-MHR nozzle against rotation! Using this device is not absolutely necessary but enhances the maintenance work. See chapter „5.3.1 Tools and operating materials“.

Picture 102: Clamp the nozzle

Exchange of thermocouple in the adapter zone (HPS III-MHR nozzle)

1. **Clamping with clamping device:** The nozzle is screwed to the clamping device. The assembly is then clamped in the vice.
   Clamping without clamping device: The nozzle is clamped at the retainer ring in order to secure it against rotation.

Picture 103: Dismantle hold-down device

2. If installed dismantle the hold-down device by using a suitable tool and pull it off.

HPS III-MHR100/200 (valve gate) nozzles – exchange of thermocouple

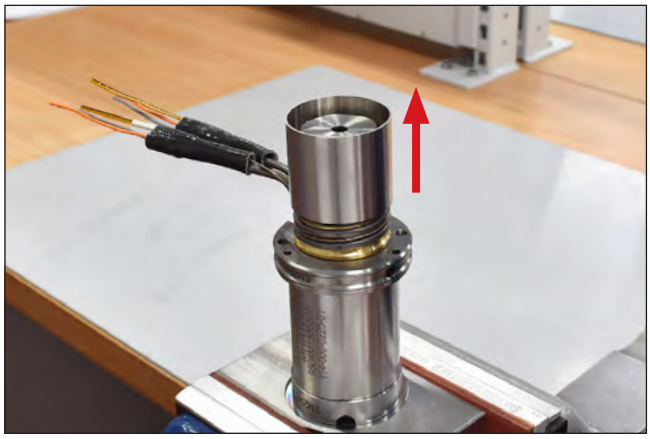

Picture 104: Disassemble protective tube

3. For disassembly of the protective tube from the heating element of the adapter coat the all parts with WD 40 penetrating oil and let it soak for a while. Pull the protective tube off. (Tipp: It may be necessary to use two screwdrivers as levers to untighten the protective tube.)
4. The adapter heater and the thermocouple are connected by a protective hose and cable ties. Disconnect the thermocouple, disassemble the broken thermocouple from the cutout and pull it out of the bore in the heating element.

Picture 105: Coated tip of thermocouple

5. Coat the tip of the new thermocouple with heat transferring paste (see chapter „5.3.1 Tools and operating materials“) and insert it into the bore in the heating element as far as it will go.

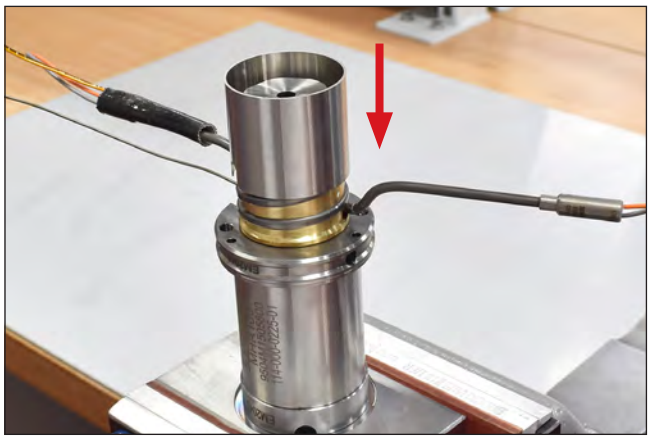

Picture 106: Installation of the new thermocouple, installation of the protective tube

6. Bend the thermocouple carefully and wind it along the heater. At the same time slide the protective tube over the heating element to fix the already positioned part of the thermocouple.
7. Check functioning of the new thermocouple by heating up the heating element with a controller.
8. For notes for installation of the nozzle please refer to chapter „5.6 Installation of HPS III hot runner systems for direct side gating“.

HPS III-MHR100/200 (valve gate) nozzles – exchange of thermocouple

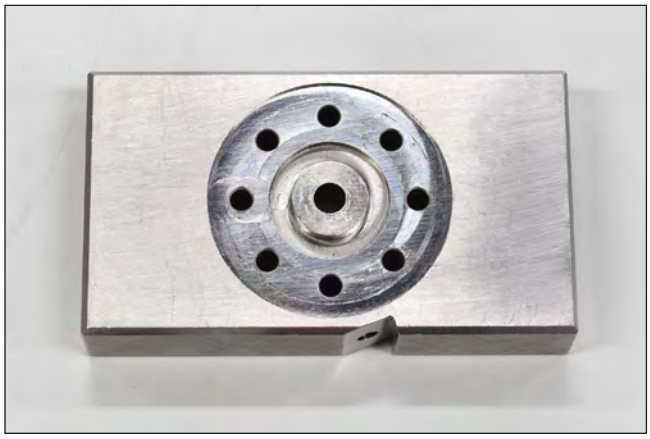

Picture 107: Clamping device for HPS III-MHR nozzles

NOTE!

For the thermocouple exchange a clamping device is available to secure the HPS III-MHR nozzle against rotation! Using this device is not absolutely necessary but enhances the maintenance work. See chapter „5.3.1 Tools and operating materials“.

Picture 108: Clamp the nozzle, disassemble the adapter

Picture 109: Disassemble the retainer ring

Exchange of thermocouple in the nozzle zone (HPS III-MHR nozzle)

1. **Clamping with clamping device:** The nozzle is screwed to the clamping device. The assembly is then clamped in the vice.
   Clamping without clamping device: The nozzle is clamped at the retainer ring in order to secure it against rotation.
2. For disassembly of the adapter coat it with WD 40 penetrating oil and let it soak for a while. Bend the adapter heater slighly upwards so that it can rotate freely.
3. Carefully unscrew and remove the adapter by using a ring spanner insert.
4. Unscrew the nozzle and disassemble the retainer ring.

HPS III-MHR100/200 (valve gate) nozzles – exchange of thermocouple

Picture 110: Disassemble the protective tube

5. Clamp the nozzle carefully and slightly at the nozzle body.
6. Bend the nozzle heater carefully into an upright position. Coat the protective tube with WD 40 penetrating oil.
7. Pull the protective tube off.

Picture 111: Coated tip of thermocouple

8. The nozzle heater and the thermocouple are connected by a protective hose and cable ties. Disconnect the thermocouple, disassemble the broken thermocouple from the cutout and pull it out of the bore in the heating element.
9. Disassemble the broken thermocouple from the cutout and pull it out of the bore in the nozzle.
10. Coat the tip of the new thermocouple with heat transferring paste (see chapter „5.3.1 Tools and operating materials“) and insert it into the bore in the nozzle as far as it will go.

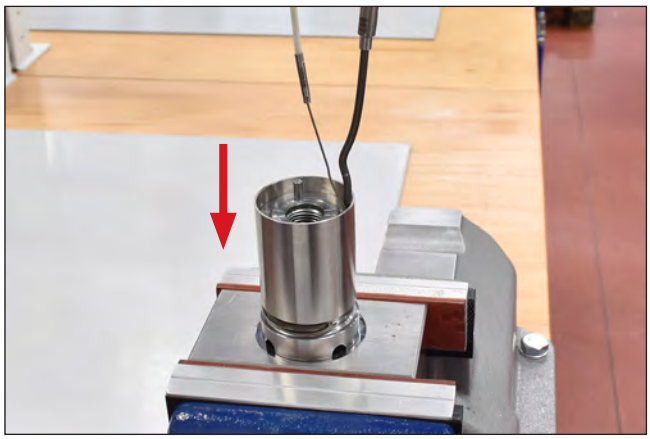

Picture 112: Installation of the new thermocouple, installation of the protective tube

11. Bend the thermocouple carefully and wind it along the heater. Afterwards slide the protective tube on.
12. Check functioning of the new thermocouple by heating up the nozzle with a controller.
13. Check the threads of adapter and nozzle body for damage, clean them with a soft wire brush and coat them with high temperature installation paste (see chapter „5.3.1 Tools and operating materials“). The front and spotting areas must be metallic bright.
14. Install the retainer ring.
15. Screw the adapter in by hand. Heat up the nozzle body to 200 °C by using a controller. Tighten the adapter with a torque of 80 Nm.
16. For notes for installation of the nozzle please refer to chapter „5.6 Installation of HPS III hot runner systems for direct side gating“.

7.7 Instructions for service and repair

- Only genuine spare parts must be used.
- When ordering spare parts please use the specifications given in the spare-parts lists.
- In case of service requests please always have the serial number, order number and type of the used hot runner system ready.

- **Service**
  www.ewikon.com in the "Contact" menue, submenue "Sales network", "Your contact at EWIKON", "Service department"
  E-Mail: service@ewikon.com

8. Decommissioning

8.1 Safety instructions

HAZARD!

Connected power supply during deinstallation

Risk of deadly electric shock or severe injuries due to live components.

- The hot runner components and the mould have to be disconnected from the voltage source during deinstallation.

WARNING!

PPE

Hot surfaces / hot material (plastic melt)

Body burns by hot surfaces.

- Let the HPS III hot runner system and all components cool down completely to ambient temperature before starting maintenance work / disassembling. Never touch material leaking from the nozzle/the mould/the hot runner or the material inlet. Even material that seems to be cooled down already may still be hot inside the core and cause burns.
- Please make sure you wear your personal protective equipment (PPE)

Escape of hydraulic liquid and pressurised air

Risk of injuries.

- All hydraulic or pneumatic supply lines must be depressurised.

NOTE!

- All operating materials and fluids must be emptied, collected and disposed in accordance with the local regulations.
- Follow the safety instructions for transport with lifting accessories (see chapter „5.1 Transport“).
- Only specialised staff is allowed to carry out any deinstallation work.

8.2 Instructions for disposal

NOTE!

Once disposed components must not be used again. EWIKON disclaims any responsibility for personal injuries and material demage resulting from re-use.

In case that no special arrangements regarding return or disposal were agreed with EWIKON the disassembled components have to be recycled after deinstallation:

- Scrap metallic materials.
- Recycle plastic components and plastic waste from the production.
- Dispose the remaining components sorted by their material properties.
- Electronic scrap and electronic components are special waste and must be disposed by authorised specialised companies only.
- With regard to the environmentally sound disposal of the deinstalled HPS III hot runner system the local regulations for waste disposal must be observed.

9. Tightening torques

9.1 Tightening torques for socket head screws

- Tighten socket head screws with the matching torques according to the following chart. All values are non-binding standard values for socket head screws with internal hexagon and standard metric thread complying with DIN EN ISO 4762.

All values were determined in accordance with the guideline VDI 2230 sheet 1:2014-12 which is based on the most frequently used torque controlled tightening method with normally 90% utilisation of the minimum yield strength $R_{p0,2}$. The values given are valid for socket head screws with property class 8.8, 10.9 and 12.9 with internal hexagon and standard metric thread complying with DIN EN ISO 4762 (replacement for DIN 912).

- The values are valid for clearance holes with tolerance "medium" complying with DIN EN 20273.
- The values are to be understood as maximum permissible tightening torques (without safety factor).
- Only calibrated tightening tools must be used.
  (When the tightening method/ the tightening tool shows a greater variation (approx. > ±5%) the required tightening torque M_A must be appropriately reduced to avoid overstressing (control test required). It must be considered that different tightening methods can show a different variation.)
- EWIKON generally recommends to use screws with property class 12.9 only.

EWIKON

Tightening torques for socket head screws

Thread	Lead	Width across flats AW	Property class	Maximum permissible tightening torque M_A at room temperature			
				Lubricated (High temperature installation paste, see chapter „5.3.1 Tools and operating materials“) μ_G=0.10		Screws in as-delivered condition (slightly oiled) μ_G=0.14	
				M_A [Nm]	M_A [ft·lb]	M_A [Nm]	M_A [ft·lb]
M3	0.5	2.5	8.8	1.12	0.83	1.41	1.04
			10.9	1.58	1.17	1.98	1.46
			12.9	1.90	1.40	2.37	1.75
M4	0.7	3	8.8	2.6	1.9	3.3	2.4
			10.9	3.9	2.9	4.8	3.5
			12.9	**4.5**	**3.3**	**5.6**	**4.1**
M5	0.8	4	8.8	5.2	3.8	6.5	4.8
			10.9	7.6	5.6	9.5	7.0
			12.9	**8.9**	**6.6**	11.2	8.3
M6	1.0	5	8.8	9.0	6.6	11.3	8.3
			10.9	13.2	9.7	16.5	12.2
			12.9	**15.4**	**11.4**	**19.3**	**14.2**
M7	1.0	6	8.8	14.8	10.9	18.7	13.8
			10.9	21.7	16.0	27.5	20.3
			12.9	**25.4**	**18.7**	32.2	23.7
M8	1.3	6	8.8	21.6	15.9	27.3	20.1
			10.9	31.8	23.5	40.1	29.6
			12.9	**37.2**	**27.4**	**46.9**	**34.6**
M10	1.5	8	8.8	43	32	54	40
			10.9	63	46	79	58
			12.9	**73**	**54**	93	69
M12	1.8	10	8.8	73	54	93	69
			10.9	108	80	137	101
			12.9	**126**	**93**	**160**	**118**
M14	2.0	12	8.8	117	86	148	109
			10.9	172	127	218	161
			12.9	**201**	**148**	255	188
M16	2.0	14	8.8	180	133	230	170
			10.9	264	195	338	249
			12.9	**309**	**228**	**395**	**291**
M18	2.5	14	8.8	259	191	329	243
			10.9	369	272	469	346
			12.9	**432**	**319**	549	405
M20	2.5	17	8.8	363	268	464	342
			10.9	517	381	661	488
			12.9	**605**	**446**	**773**	**570**
M22	2.5	17	8.8	495	365	634	468
			10.9	704	519	904	667
			12.9	**824**	**608**	**1057**	**780**
M24	3.0	19	8.8	625	461	798	589
			10.9	890	656	1136	838
			12.9	**1041**	**768**	**1329**	**980**

Chart 13: Tightening torques for socket head screws with standard metric thread according to DIN EN ISO 4762

9.2 Tightening torques for manifold screw connections and retaining screws

Thread	Tightening torque Lubricated (high temperature installation paste, see chapter „5.3.1 Tools and operating materials“)	
	M_A [Nm]	M_A [ft·lb]
M4	1.5	1.1
M6	5	3.7
M8	10	7.4

Chart 14: Tightening torques for manifold screw connections (for standard installation of nozzles) and retaining screws

9.3 Tightening torques for clamping covers of HPS III-MH nozzles

HPS III-MHL 100/200 - versions and tightening torques					
Nozzle	Width B [mm]	No. of tips	No. of screws	Tightening torque	
				M_A [Nm]	M_A [ft·lb]
MHL100	42	4	2	11	8.1
	62	8	4	11	8.1
	62	4	4	8	5.9
	62	4	2	11	8.1
MHL200	62	4	2	16	11.8

Chart 15: Tightening torques for clamping covers of HPS III-MHL 100/200 nozzles

HPS III-MHR 100/111/200 - versions and tightening torques						
Nozzle	No. of tips	Tightening torque				
		M4x12 - 12.9		M6x10 - 12.9		
		M_A [Nm]	M_A [ft·lb]	M_A [Nm]		M_A [ft·lb]
MHR100/111	2, 4, 8	4	3	11		8.1
MHR 200	2, 4	4	3	2 tips:	6	4.4
				4 tips:	11	8.1

Chart 16: Tightening torques for clamping covers of HPS III-MHR 100/111/200 nozzles

HPS III-MHR 112 - versions and tightening torques			
Nozzle	No. of tips	Tightening torque	
		M4x12 - 12.9	
		M_A [Nm]	M_A [ft·lb]
MHR112/122	2	2.5	1.8

Chart 17: Tightening torques for clamping covers of HPS III-MHR 112 nozzles

- The tightening torques given above are only valid for unlubricated screws.
- Heat up nozzle to processing temperature and keep processing temperature for at least 10 minutes (maximum nozzle temperature 350 °C) before finally retightening the screws with the matching torque.
- For detailed installation instructions for the clamping cover of HPS III-MH nozzles see chapter „5. Installation“.

EWIKON
Heißkanalsysteme GmbH
Siegener Straße 35
35066 Frankenberg
Tel: +49 6451 / 501-0
Fax: +49 6451 / 501-202
E-Mail: info@ewikon.com
www.ewikon.com

Technical information subject to alteration.

EWIKON