EWIKON

HPS III valve gate hot runner systems

Operating manual

Valid for:
HPS III-S / pro SHOT nozzles
HPS III-T/TE manifolds
Single drive units
Synchronous plate drives
Complete hot halves

CE

Item number: 22064
Version: 3.0

EWIKON

Content

1 General remarks ... 7
1.1 Information on this operating manual ... 7
1.2 Manufacturer ... 7
1.3 Formal information on the operating manual ... 7
1.4 Conventions ... 8
1.4.1 Instructions and system responses ... 8
1.4.2 Enumerations ... 8
1.4.3 Abbreviations ... 8
2 Safety instructions ... 9
2.1 Safety instructions and symbols used ... 9
2.1.1 Signal words for hazard classification ... 10
2.1.2 Explanation of pictograms ... 10
2.2 Intended use ... 11
2.3 Improper use ... 11
2.4 Qualification of staff ... 11
2.4.1 Demands on specialised staff ... 11
2.5 Personal Protective Equipment (PPE) ... 12
2.5.1 Symbols of the personal protective equipment ... 12
2.6 General Hazards and Safety Measures ... 13
2.7 Electrical equipment ... 14
2.8 Spare and wear parts, auxiliary and operating materials ... 15
2.9 Limitation of liability ... 16
2.10 Warranty terms ... 16
3 Technical data ... 17
3.1 Mechanical specifications ... 17
3.1.1 Main dimensions of the HPS III hot runner system ... 17
3.1.2 Operating parameters of the HPS III hot runner system ... 17
3.2 Electrical specifications ... 17
3.2.1 Connections/connector pin assignment ... 17
3.3 Hydraulic / pneumatic specifications (drive units) ... 17
3.4 Operating conditions ... 17
3.4.1 Noise emission ... 18
3.4.2 Cooling agent ... 18
3.5 Type plate ... 18
4 Functional description of the HPS III hot runner system ... 19
5 Installation ... 21
5.1 Transport ... 21
5.1.1 Safety information on transport ... 21
5.1.2 Recommended lifting accessories and slings ... 22
5.1.3 Checking the lifting accessories and slings before use ... 23
5.1.4 Attachment points ... 23
5.1.5 Working load limit for lifting accessories and slings ... 24
5.1.6 Removal from transport crate ... 25
5.1.7 Transport and movement during installation ... 26
5.2 General safety instructions ... 29
5.3 Technical Requirements ... 33
5.3.1 Tools and operating materials ... 33
5.3.2 Standard parts ... 37
5.4 Checks before installation ... 38
5.4.1 Notes on mould layout ... 38
5.4.2 Standard dimensions of hot runner systems ... 38
5.4.3 Dimensions to be checked for a HPS III hot runner system with HPS III-S / pro SHOT nozzles ... 39

5.5 Montage und Einbau ... 40
5.5.1 Design of valve gate systems with individual drive units and synchronous plate systems for HPS III-S / pro SHOT nozzles for standard and front installation ... 42
5.5.2 Installation of a HPS III-S / pro SHOT VG valve gate nozzle ... 43
5.5.3 Manifold installation ... 45
5.5.4 Installation of single drive units for HPS III-S / pro SHOT VG nozzles ... 48
5.5.5 Drive unit integrated in clamping plate (version 1) ... 49
5.5.6 Drive unit integrated in clamping plate (version 2) - Installation in the clamping plate ... 51
5.5.7 Drive unit placed on manifold (coupled) ... 53
5.5.8 Drive unit placed on manifold (screwed-on) (version 1) ... 56
5.5.9 Drive unit placed on manifold (screwed-on) (version 2) ... 57
5.5.10 Installation of valve pin ... 59
5.5.11 Electric drive unit with step motor ... 61
5.5.12 Electric drive unit with servo motor ... 64
5.5.13 Installation of synchronous plate valve gate systems for HPS III-S / pro SHOT nozzles for standard and front installation ... 68
5.5.14 Drive unit integrated in clamping plate (version 2) for synchronous plate systems Installation in the clamping plate ... 69
5.5.15 Installation of the synchronous plate (version 1) ... 70
5.5.16 Installation of the guiding system (version 1) for synchronous plate systems ... 71
5.5.17 Installation of the synchronous plate and guiding system (version 2) ... 74
5.5.18 Installation of the valve pin (version 1 and 2) ... 76
5.5.19 Adjusting the valve pin length by adapting the spacer bushings (version 1 and 2) ... 78
5.5.20 Dimensional check for adjusting the valve pin length (for version 1 and 2) ... 80
5.5.21 Installation of a hot half with HPS III valve gate nozzles ... 82
5.6 Electrical connection of hot runner systems ... 84
5.6.1 Safety instructions ... 84
5.6.2 General information ... 85
5.6.3 Example: Wiring of 1-drop hot runner systems ... 90
5.6.4 Example: Wiring of 6-drop hot runner systems (manifold with 2 control zones) ... 91
5.7 Checks after installation ... 92

6 Start-up and instructions for operation ... 93
6.1 Safety instructions ... 93
6.2 Requirements for operation ... 95
6.3 Start-up of a HPS III hot runner system ... 96
6.3.1 First-time start-up and filling of a HPS III hot runner system ... 96
6.3.2 Start-up of an already filled HPS III hot runner system ... 96
6.3.3 Colour and material changes ... 97
6.4 Instructions for the operation of valve gate systems ... 98
6.4.1 Machine downtimes > 5 minutes of systems with HPS III-S nozzles (system / single tip / single cavity) ... 99
6.4.2 Dismantling the mould after the end of production / dismantling the hot runner ... 99
6.5 Possible malfunctions ... 100
6.5.1 Troubleshooting ... 100

7 Maintenance ... 101
7.1 Safety instructions ... 101
7.2 Instructions for maintenance ... 103
7.3 Maintenance schedule ... 103
7.4 Checklist for possible maintenance work ... 103
7.5 Installation / deinstallation of nozzle tips ... 104
7.5.1 General information ... 104
7.5.2 Versions of nozzle tips, nosepieces and screw-on gate bushes ... 105
7.5.3 Exchange of nozzle tips with nozzle installed in the mould ... 106
7.5.4 Exchange of nozzle tips outside the mould ... 106
7.5.5 Deinstallation of one-piece nozzle tips ... 107
7.5.6 Installation of one-piece nozzle tips ... 108
7.5.7 Demontage von zweiteiligen Düsenspitzen ... 109

7.5.8 Installation of two-piece nozzle tips ... 111
7.6 Exchange of a thermocouple on HPS III-S / pro SHOT / HPS III-SXE nozzles ... 112
7.6.1 Clamping of nozzle in a vice ... 112
7.6.2 HPS III-S3 nozzles ... 112
7.6.3 HPS III-S4.5 nozzles ... 116
7.6.4 HPS III-S6/9/12/18, pro SHOT 60/90 and HPS III-SXE 6/9/12 nozzles ... 119
7.7 Deinstallation / exchange of valve pins ... 122
7.7.1 Drive units with pistons - deinstallation und exchange of valve pins ... 122
7.7.2 Electric drive unit with step motor – deinstallation and exchange of valve pins ... 123
7.7.3 Electric drive unit with servo motor – deinstallation and exchange of valve pins ... 124
7.8 Exchange of a sealing kit for drive units integrated in the clamping plate ... 127
7.9 Lubrication of electric servo drives for synchronous plate systems with pull & rail mechanism ... 133
7.10 Instructions for service and repair ... 135

8 Decommissioning ... 136
8.1 Safety instructions ... 136
8.2 Instructions for disposal ... 137

9 Tightening torques ... 138
9.1 Tightening torques for socket head screws ... 138
9.2 Tightening torques for manifold screw connections and retaining screws ... 140
9.3 Tightening torques for tip inserts ... 141
9.4 Tightening torques for screws to fix the valve pin in the valve pin retainer ... 143
9.5 Tightening torques for drive units ... 143
9.6 Tightening torques for valve pin retainer for electric drive units ... 144
9.7 Tightening torques for valve pin seals ... 144
9.7.1 Tightening torques for one-piece valve pin seals ... 144
9.7.2 Tightening torques for two-piece valve pin seals ... 145

1 General remarks

NOTE

Improper operation of the device may result in severe personal injury and considerable material damage! You must carefully read this operating manual and familiarise yourself with the safety installations before installing, commissioning or maintaining the device. Do not operate the device without having received appropriate training.

1.1 Information on this operating manual

This operating manual has been drawn up in accordance with the **EN IEC/IEEE 82079-1** and **EN ISO 20607** standards to enable safe and efficient operation.

1.2 Manufacturer

EWIKON Heißkanalsysteme GmbH
Siegener Straße 35
D – 35066 Frankenberg / Germany

Phone: +49 6451 501-0
Fax: +49 6451 501-202

E-mail: info@ewikon.com

Web: www.ewikon.com

1.3 Formal information on the operating manual

Person in charge of documentation:	Benjamin Wetter
Item number:	22064
Version:	3.0
Printing date:	2026-10-14
Language:	English (Translation of the original operating manual)

© Copyright, 2026. All rights reserved. Full or partial reproduction subject to prior written approval by EWIKON Heißkanalsysteme GmbH

1.4 Conventions

1.4.1 Instructions and system responses

Operating steps that have to be carried out by the operator are displayed as a numbered list. The sequence of the steps has to be adhered to.

Example:

1. Operating step 1
2. Operating step 2

1.4.2 Enumerations

Enumerations without mandatory sequence are displayed as a list with bullet points.

Example:

- Point 1
- Point 2

1.4.3 Abbreviations

The following terms and abbreviations are used in the operating manual:

Abbreviation	Meaning
PPE	Personal Protective Equipment
HPS	High Performance Systems
EU	European Union
BR	Installation space
H1	Manifold height
H2	Manifold height + top pressure pad
H3	Manifold height + pressure pad with centering + top pressure pad
H4	Manifold height + top pressure pad + bottom pressure pad
P	Height of nozzle retainer frame plate
B	Height of top pressure pad
KH	Nozzle body height
X	Nozzle length (lower edge of nozzle body to article surface)
ΔS	Gap dimension Delta S
R_A	Sprue bush radius
R_M	Machine nozzle radius
N	Height of hold-down device
HR	Retainer ring height

Abbreviation	Meaning
G	Height from centre axis of tip to end of nozzle
X	X dimension of nozzle
$T_{K1}/T_{K2}/T_{K3}$	Standard dimensions to determine gap dimension
G	Thread
P	Fit
SW	Width across flats
T	Blueing area
m	Mass
ρ	Density
V	Volume
L x B x H	Length x width x height (e.g. mould plate, hot half)
F	Force
M	Bending moment
T_{HK}	Hot runner temperature (processing temperature)
T_{WZ}	Mould temperature
ΔT	Difference T_{HK} - T_{WZ}

Table 1: Terms and abbreviations

2 Safety instructions

The relevant requirements of European directives have been applied to the HPS III hot-runner system. Depending on the system configuration, these are:

- Machinery Directive 2006/42/EC
  - The protective objectives of the Low Voltage Directive have been taken into account – insofar as they apply to the system – in accordance with Annex I, No. 1.5.1 of the Machinery Directive.
- Low Voltage Directive (LVD) 2014/35/EU

It has been designed, manufactured and checked for safety according to the applicable safety rules and legislation and the state of the art.

The HPS III hot runner system is delivered in perfect working order.

The system may pose risks, if it is:

- not operated by professionally trained staff.
- used improperly or not used as intended.
- not in perfect order regarding safety.

2.1 Safety instructions and symbols used

Signal words introduce the safety instructions and are marked by symbols. They draw the user's attention to possible hazardous situations that may occur during installation, operation and maintenance. Safety instructions must be followed to prevent accidents, personal injury or material damage.

Warnings

- Protect against possible personal injury and material damage when followed
- Classify the extent of hazard by the signal word
- Indicate the risk of personal injury by hazard signs
- Indicate the type and source of hazard
- Indicate the risk and possible consequences
- Show measures to prevent hazards and prohibit certain behaviours

---

WARNING

Source of hazard

Possible consequences, if ignored.

- Measures/prohibitions.

The hazard sign marks warnings which warn against personal injuries.

Source of hazard

The source of hazard indicates the cause of hazard.

Possible consequences, if ignored

If the warnings are ignored, possible consequences are e. g. crushing, burnings or other severe injuries.

Measures/Prohibitions

“Measures/Prohibitions” lists actions that are to be carried out to prevent a hazard (e. g. stop a drive unit) or that are prohibited to prevent a hazard.

2.1.1 Signal words for hazard classification

DANGER

Indicates an imminently hazardous situation which, if not avoided, will result in death or serious injury.

WARNING

Indicates a potentially hazardous situation which, if not avoided, will result in death or serious injury.

CAUTION

Indicates a potentially hazardous situation which, if not avoided, will result in minor injury or material damage.

NOTE

Indicates useful additional information and tips to promote trouble-free operation and to prevent material damage.

2.1.2 Explanation of pictograms

Read operating manual

Caution! Risk of electrocution

Caution! Hot surface

Caution! Oxidising agents

Caution! Suspended loads

Caution! Risk of crushing

Caution! Explosive atmosphere

Caution! Hand injuries or cuts

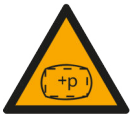

Caution! Pressurised systems

Caution! Forklift trucks operating

2.2 Intended use

EWIKON hot runner systems are exclusively designed for the intended use described in this manual.

Any different and unintended use is excluded and may result in personal injuries and material damage. Warranty expires in this case.

EWIKON hot runner systems and single nozzles are only to be used for injection moulding applications, assembled in an enclosed injection mould.

They are used to process thermoplastic resins according to their individual processing requirements and to pass them gently from the injection unit to the cavity by optimum temperature distribution and flow paths.

In order to use the system as intended it is essential that all tips and information given in this operating manual are read, understood and followed.

To ensure safe operation of the system, the given maintenance & inspection schedule has to be adhered to.

The system is designed for an injection pressure of 2000 bar.

The resin used has to be processed according to the guidelines of the material manufacturer.

NOTE

Use of the HPS III hot runner system

Use the HPS III hot runner system exclusively for its intended use and in perfect condition as regards safety! This is the only way to guarantee a reliable operation of the HPS III hot runner system.

2.3 Improper use

Any use deviating from the use defined under “Intended use” or that goes beyond that use is considered improper use.

2.4 Qualification of staff

The staff has to prove that it is qualified to perform assembly, maintenance and repair. Any lack of knowledge has to be eliminated by training and briefing the staff.

2.4.1 Demands on specialised staff

Improper use of EWIKON hot runner systems may result in personal injuries or material damage. Only specialised staff is allowed to carry out any work.

Only specialised staff is allowed to install and operate EWIKON hot runner systems. Specialised staff is trained, has proven knowledge and experience in operating e. g. injection moulding units or electrical machines and devices as well as knowledge of the relevant regulations and is able to indepently identify possible hazards and prevent them by taking protective measures.

2.5 Personal Protective Equipment (PPE)

Wear the necessary protective equipment when working on or near the machine. Special information on the personal protective equipment in the work area has to be observed.

2.5.1 Symbols of the personal protective equipment

Always wear the following when carrying out any work:

Protective clothes: To protect your body wear tight-fitting clothes with low resistance to tearing, without protruding parts and with long sleeves and long trousers. Do not wear rings, chains or any other jewelry.

Safety shoes: To protect yourself against electric shocks, melt splashes, heavy, falling objects and slips and falls on slippery surfaces.

Always wear the following when carrying out special work:

Safety glasses: To protect your eyes against scattering debris, heat and melt splashes.

Face mask: To protect your face against scattering debris, heat and melt splashes.

Protective gloves (heat resistant): To protect your hands against extreme heat, abrasions, punctures and more severe injuries.

Mask: To protect the respiratory tract from gases, vapours, liquid mists, coarse and respirable fine dust (dust mask)

Ear protection: To protect your ears against loud ambient noise.

Protective helmet: To protect your head against falling objects and sharp edges.

Heat resistant apron: To protect your body against extreme heat.

2.6 General Hazards and Safety Measures

The company operating the system must comply with the statutory obligations on occupational safety. In addition to the safety instructions of this manual the safety, accident prevention and environment protection provisions applicable for the system's range of use must be adhered to. The operating company must clearly define responsibilites and make sure that all staff operating the system has read and understood this manual. The company also has to inform about hazards at regular intervals. Personal protective equipment has to be made available to the staff. Maintenance intervals have to be respected.

Risk of physical injuries by high pressure or unexpected material leakage

- Unexpected material leakage may result in burns. There is a risk of serious injuries or death and/or damage to the hot runner.
- There is also a risk of burns, if water gets onto or into the hot runner. If the water reaches dangerously high temperatures, the metal housing may burst and cause serious injuries due to emerging water vapour or melting resins.

Safety measures

- Make sure the hot runner system heats up evenly. Particularly for large manifolds it may be necessary to switch on nozzle and sprue bush heaters simultaneously, but later than the manifold heaters.
- Make sure the nozzle tips and/or the gates are not blocked by solidified resin that has a higher melting point and that there is no humidity on the hot runner system, e.g. caused by a leaky cooling circuit
  - (please see Chapter 6.3, "Start-up of a HPS III hot runner system").

Risk of burns

- Hot surfaces
  Many components of the hot-runner system become very hot and can cause severe skin burns on contact.
- Hot material (plastic melt)
  Never touch material leaking from the nozzle/the mould/the hot runner or the material inlet. Even material that seems to be cooled down already may still be hot inside the core and cause burns.

Safety measures

- Please make sure you wear your personal protective equipment (PPE) when working near or on a hot runner system. Pay special attention to warnings indicating hot surfaces. All components have to be cooled down to ambient temperature before you start working. Exceptions to these rules are explicitly mentioned.

Risk of electric shocks

- Danger to life by electric shock.
  Touching live surfaces may result in severe or even lethal injuries.
- Always keep water away from live components. There is a risk of short circuits!

Safety measures

- Electrical systems have to be disconnected from the mains and secured against being switched on again before any work is carried out. Only authorised electricians are allowed to carry out any work on electrical systems.
- All components have to be connected to a suitable power source according to the wiring diagrams and under consideration of the applicable local regulations. Injection moulding machine and hot runner systems have to be grounded.

Risk of physical injuries by suspended/heavy loads

- Only trained staff is authorised to operate lifting devices and forklift trucks. Proceed slowly and with care. Prevent the uncontrolled swinging of the loads.

Safety measures

- Lifting devices and forklift trucks have to be designed to bear the weight and the size of the cold runner system. Make sure to use the marked lifting points.

Risk of physical injuries by pressurised connecting lines (e.g. air, hydraulics, water)

- All supply lines for the medium supply of the hot runner and/or the hot runner system or the hot half have to be long enough to prevent any stress when the mould halves part. They must not be affected by moving parts of the mould or of the machine. Prevent the hoses from rubbing over the edges of the mould as they may be damaged because this might cause a spontaneous leakage of pressurised process media (pressurised air, hydraulic oil, water).

Safety measures

- Make sure you have depressurised all supply lines before carrying out any work. Only skilled personnel is allowed to carry out work on the supply lines. Please wear your personal protective equipment (PPE).

Risk of physical injuries by sharp edges and corners

- Sharp edges and corners pose a risk of injury, possibly resulting in skin abrasions and cut injuries.

Safety measures

- Make sure you wear protective gloves when working near sharp edges and corners. Proceed with care.
- Make sure the system is clean and free of burrs.

Risk of physical injuries by crushing of extremities

- There is a risk of injury when lifting heavy loads during assembly operations, possibly resulting in crushing of hand or other parts of the body.

Safety measures

- Wear protective gloves to prevent injuries while working around heavy loads.
- Make sure all body parts are kept away from the hazardous area while setting down heavy loads.

2.7 Electrical equipment

DANGER

Residual voltage after activation

Risk of death by electric shock and severe injuries caused by live components.

- Check for zero potential before performing any work!

Any work on electrical equipment must be carried out by qualified electricians. Always apply the 5 safety rules when working with electrical components:

- Disconnect from the mains
- Secure against reconnection (by activating the repair switch and installing a safety lock at the same time, if necessary)
- Verify that the installation is dead
- Carry out grounding and short circuiting
- Provide protection against adjacent live parts

Maintenance work must be carried out by qualified and trained staff or maintenance staff. Never use the HPS III hot runner system with faulty or inoperable electrical connections. In case of energy supply disruptions immediately switch off the HPS

III hot runner system. The maintenance & inspection schedules regarding electrical components given by the manufacturers have to be adhered to. Check for damaged insulation at regular intervals.

2.8 Spare and wear parts, auxiliary and operating materials

The use of non-OEM spare and wear parts as well as auxiliary material may pose risks. Only use original parts or parts approved by EWIKON Heißkanalsysteme GmbH.

Only use auxiliary and operating materials which are suitable for their intended use (compare Chapter 5.3, "Technical Requirements").

2.9 Limitation of liability

All information and instructions given in this manual have been compiled in consideration of the applicable standards and regulations, state of the art as well as our know-how and experience.

EWIKON does not assume liability for any damage caused by:

- Non-observance of this manual
- Improper use
- Use of unskilled staff
- Unauthorised retrofitting or technical modifications
- Use of non-approved spare parts as well as inappropriate auxiliary and operating materials

The technical service provided verbally, in writing or on the basis of tests represents our best knowledge but is not binding and does not release you from carrying out additional tests on the products supplied by us regarding their suitability for the intended use.

The use of the products is beyond our control. Therefore, it is your own responsibility to ensure that the products meet your specific requirements. Nevertheless, should an issue of liability arise, all damage shall be limited to the value of the products supplied by EWIKON and used by you.

We guarantee the perfect quality of our products in accordance with our general terms and conditions of sale and payment as well as the extended warranty conditions.

These are available on our homepage www.ewikon.com.

The statutory provisions prevailing at the time of conclusion of the contract shall apply.

We reserve the right of technical alterations to develop our products and enhance their performance properties.

2.10 Warranty terms

For warranty conditions of cold and hot runner systems and components please refer to the terms and conditions of EWIKON.

The full terms and conditions are available at any time on our website at www.ewikon.com.

3 Technical data

3.1 Mechanical specifications

3.1.1 Main dimensions of the HPS III hot runner system

Description	Quantity/size (approx.)	Unit
Dimensions	See catalogue / PO-related documents	mm
Weight	See catalogue / PO-related documents	kg

Table 2: Main dimensions of the HPS III hot runner system

3.1.2 Operating parameters of the HPS III hot runner system

Description	Quantity/size (approx.)	Unit
Maximum injection pressure	2000	bar
Maximum operating temperature	Depending on order	°C

Table 3: Operating parameters of the HPS III hot runner system

3.2 Electrical specifications

3.2.1 Connections/connector pin assignment

Description	Quantity/size (approx.)	Unit
Voltage	230	V
Frequency	50	Hz

Table 4: Electrical data (only valid within the EU)

3.3 Hydraulic / pneumatic specifications (drive units)

Description	Quantity/size (approx.)	Unit
Maximum hydraulic pressure (normal operation: 30 bar)	50	bar
Maximum pneumatic pressure (normal operation: 8 bar)	10	bar

Table 5: Hydraulic / pneumatic data

3.4 Operating conditions

Operating conditions	Size (approx.)	Unit
Ambient temperature (maximum value)	40	°C
Ambient temperature (minimum value)	10	°C
Relative humidity during operation (no condensation!)	20 to 80	%

Table 6: Operating conditions

3.4.1 Noise emission

Determining the sound power level of noise sources based on noise pressure measurements acc. to DIN EN ISO 3741

Operating conditions	Size (approx.)	Unit
Distance to device	Value can only be determined when the entire system is put into operation	mm
Noise pressure level (operation)	Value can only be determined when the entire system is put into operation	dB (A)

Table 7: Noise emission

3.4.2 Cooling agent

The use of unsuitable cooling agents may result in deposits and corrosion in the component to be cooled. This will negatively affect the functionality of the EWIKON hot runner system. Components of the hot runner system may be damaged by a reduced cooling performance in the worst case. Cooling agents (water) have to satisfy the following minimum requirements:

- Cooling by tap water is not recommended since hard water can cause deposits and corrosion.
- The water has to be clear, colourless and odourless.
- It has to be free from any floating or suspended matters.
- A warranty on the resistance of components to be cooled against corrosion attacks cannot be given.
- However, the use of suitable cooling agents can considerably enhance this resistance.

3.5 Type plate

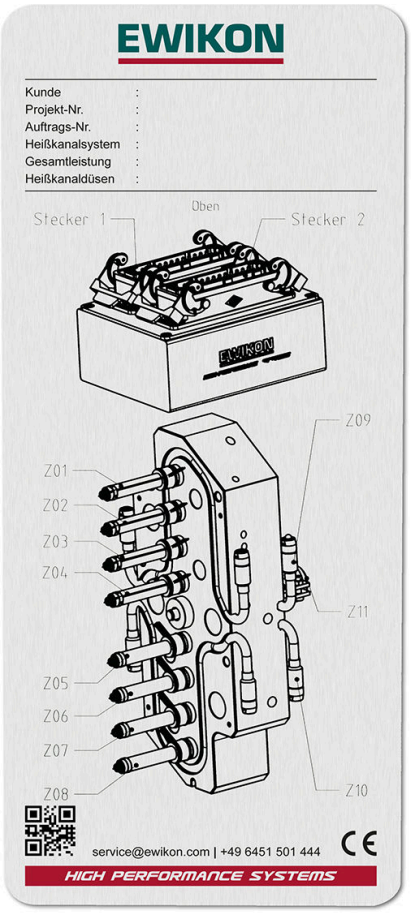

Figure 1: Type plate

CAUTION

Respect operating temperatures

Each hot runner system is individually designed for the material to be processed. Therefore, the specified operating temperatures must be observed. The temperature difference ΔT between hot runner temperature T_{HK} (processing temperature) and mould temperature T_{WZ}, must be strictly adhered to.

- Non-observance may cause an escape of melt inside the mould (ΔT too low) or damage to components (ΔT too large).

The system type plate is to be displayed prominently on the operator side of the mould. Hot halves are delivered with the type plate already mounted.

The type plate indicates project number, order number, type of hot runner system, overall performance, drive unit type, nozzles used and, if necessary, other important specifications.

For the exact allocation of heater zones and contact pins in the plugs please refer to the wiring scheme in the order specific documents.

4 Functional description of the HPS III hot runner system

The schematic diagrams of the components of a HPS III hot runner system and the installation space shown in this document should not be regarded as the only valid general layout but only present one of many possible assembly configurations.

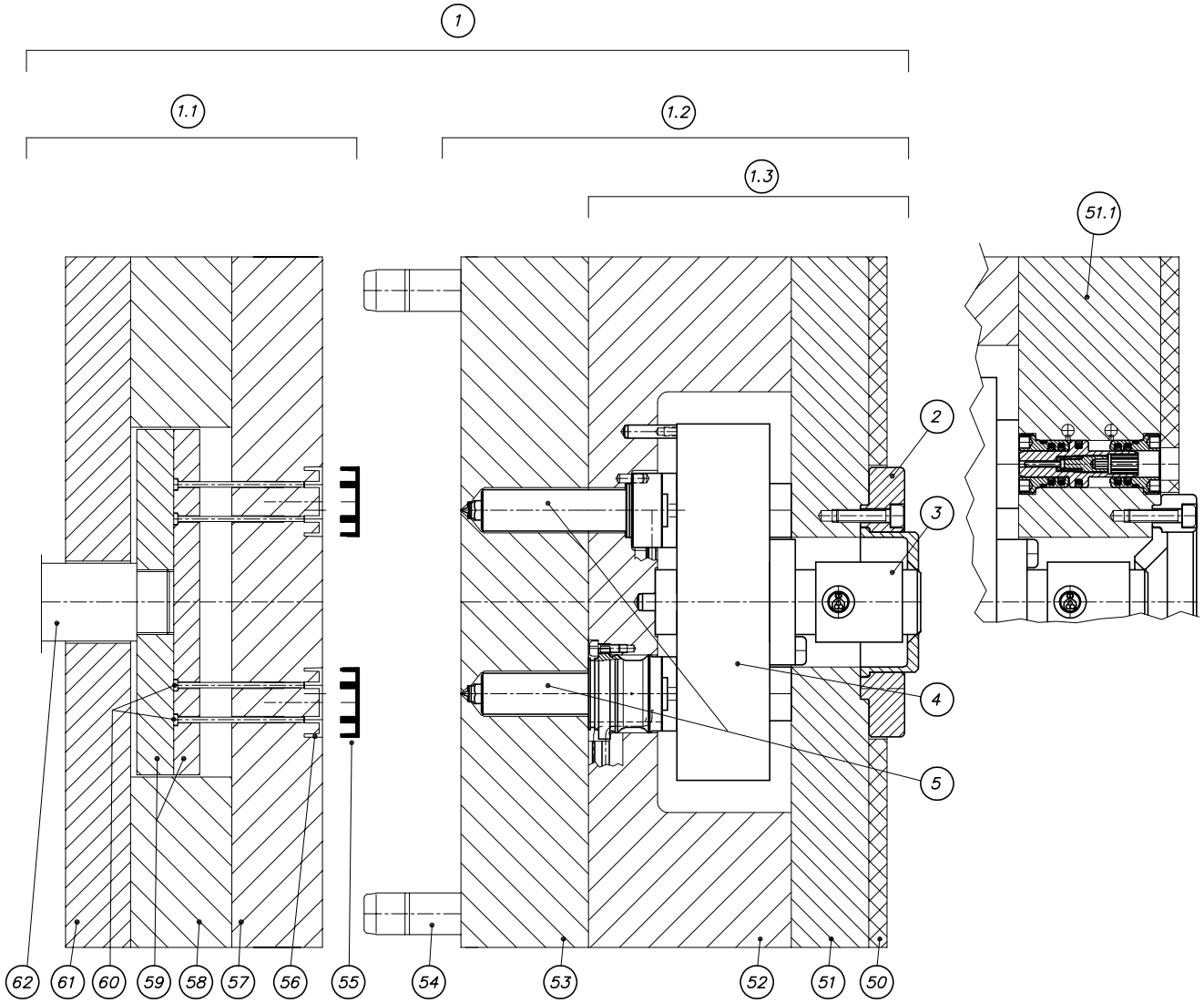

Figure 2: (z349-03) Layout of an injection mould with HPS III hot runner system for the processing of thermoplastic resins

Pos. 1	Injection mould with hot runner system	Pos. 52	Nozzle retainer frame plate
Pos. 1.1	Moving mould half (ejector side)	Pos. 53	Contour plate
Pos. 1.2	Fixed mould half (nozzle side)	Pos. 54	Guide bolts
Pos. 1.3	Hot half (nozzle side without contour plate)	Pos. 55	Moulded part
Pos. 2	Locating ring	Pos. 56	Cavity
Pos. 3	Sprue bush	Pos. 57	Contour plate
Pos. 4	Hot runner manifold	Pos. 58	Riser
Pos. 5	Hot runner nozzles	Pos. 59	Ejector plates
Pos. 50	Insulating plate (optional)	Pos. 60	Ejector pins
Pos. 51	Clamping plate	Pos. 61	Clamping plate
Pos. 51.1	Clamping plate with drive unit for valve gate nozzles	Pos. 62	Ejector bolts

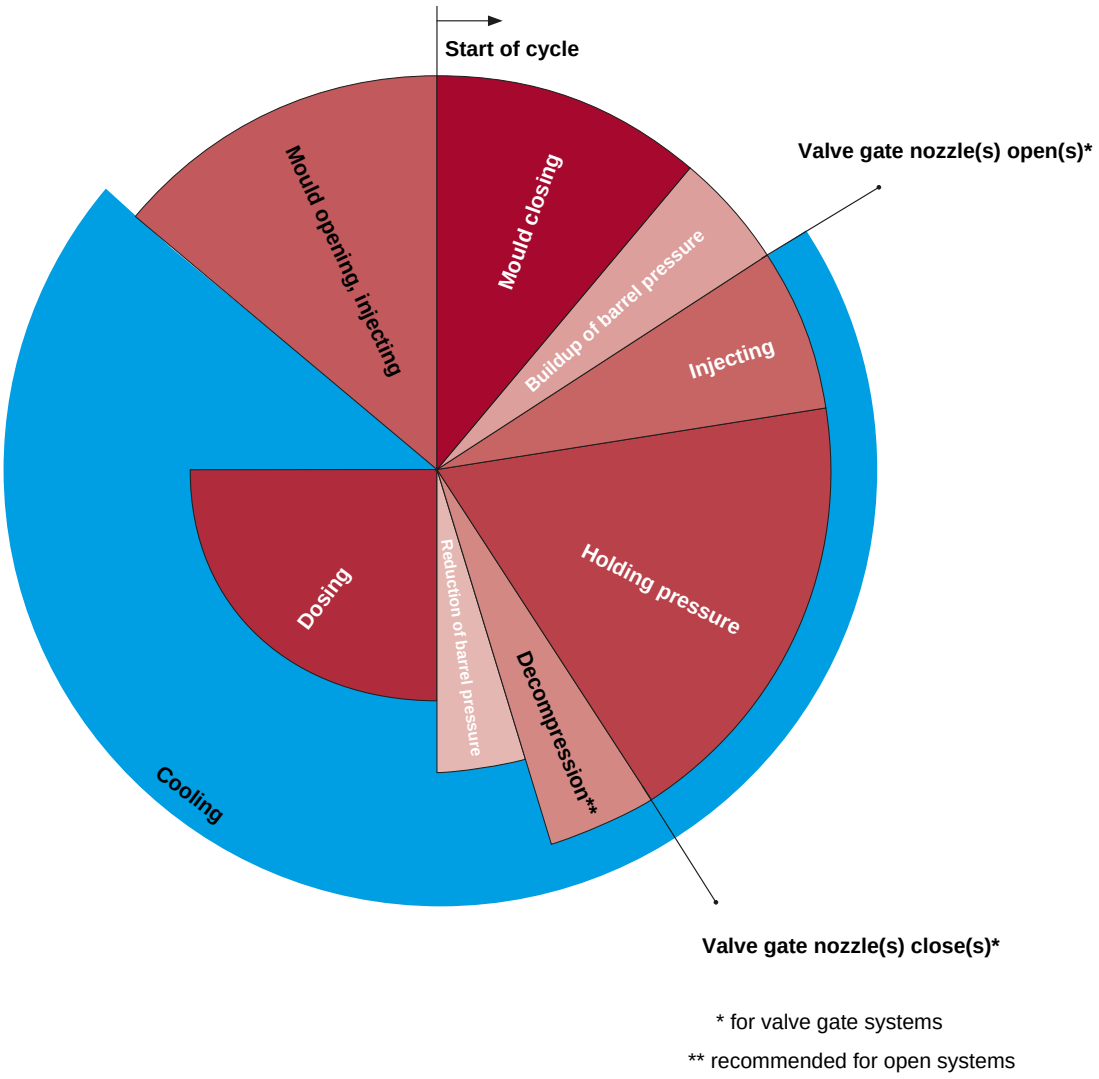

Figure 3: Injection moulding cycle

A hot runner system is used to distribute plastic melt between the injection moulding unit of an injection moulding machine and the cavities of an injection mould (compare picture 2). The plastic material remains permanently molten until it enters the cavities.

The plastic melt made available by the injection moulding unit is guided through the sprue bush to the manifold during the injection moulding cycle. In the manifold the melt stream for the individual cavities is split and fed to the hot runner nozzles. The hot runner nozzles guide the melt stream to the cooled cavities (compare picture 3).

If a valve gate system is used, the valve pins are opened when injection starts. While the moulded parts continue to cool down a holding pressure phase to compensate shrinkage follows after the injection phase with a continued, usually pressure-regulated melt transport into the cavity (compare picture 3). After the moulded part has solidified to such an extent that no new material can enter the cavity, the holding pressure phase has finished and the moulded parts cool down until they reach a safe demoulding temperature.

If a valve gate system is used the opening towards the cavity (gate) will be closed again by a movement of the valve pins after the holding pressure phase has been finished (compare picture 3). If open systems are used, a decompression phase will follow to prevent plastic melt from leaking from the gate area. While the moulded parts continue to cool down in the cavity the injection moulding machine can prepare the melt for the next cycle. After the demoulding temperature has been reached, the injection mould opens and the solidified parts are ejected.

5 Installation

The following information is intended to help you install the HPS III hot runner system. In addtion, the assembly staff has to have the know-how required to install a HPS III hot runner system.

The described installation processes are examples for standard nozzles and standard systems. Special systems may require different procedures! Please observe the instructions in the order specific documents.

5.1 Transport

This chapter describes how to transport a hot runner system without damaging it and how to ensure occupational safety for the staff.

5.1.1 Safety information on transport

WARNING

Suspended loads

Death and severe crushing of body or extremities.

- Keep clear of and do not pass under suspended loads.
- Keep clear of suspended loads while they are being transported.
- Do not touch lifting devices and lifting accessories while lifting the load.
- Only lift, transport and set down loads, if you have received appropriate training.
- Only use suitable and undamaged lifting devices and lifting accessories which are checked regularly.
- Do not exceed the maximum load limit of lifting accessories.

WARNING

Sharp edges

- Cut injuries to body and extremities, mainly to the hands.

WARNING

Heavy components

- Crushing of fingers or hand.

Recommended PPE,
see also Chapter 2.5.1:

NOTE

Inappropriate transport

Damage to the COOLSHOT cold runner system.

- Only specially trained staff is authorised to transport the COOLSHOT cold runner system.
- Only use designated attachment points to attach lifting devices.
- Exercise greatest caution when transporting the COOLSHOT cold runner system. Handle with care.

Pendular motion while lifting the cold runner systems with a lifting device (e.g. overhead crane)

Damage to the COOLSHOT cold runner system and/or injection mould.

- Avoid pendular motions! Move COOLSHOT cold runner system slowly and with care.
- When using the lifting device to connect heavy components avoid tilting while lifting and lowering.

NOTE

Inappropriate transport

Damage to the HPS III hot runner system.

- Only specially trained staff is authorised to transport the HPS III hot runner system.
- Only use designated attachment points to attach lifting devices.
- Exercise greatest caution when transporting the HPS III hot runner system. Handle with care.

Pendular motion while lifting the hot runner systems with a lifting device (e.g. overhead crane)

Damage to the HPS III hot runner system and/or injection mould.

- Avoid pendular motions! Move HPS III hot runner system slowly and with care.
- When using the lifting device to connect heavy components avoid tilting while lifting and lowering.

5.1.2 Recommended lifting accessories and slings

The lifting accessories and slings have to conform to the machinery directive 2006/42/EC (i.a. the general principles section, chapter 4.1.2.5 “Lifting accessories and their components”). Forged steel components have to be checked according to DIN EN 1677-1 “Components for slings – Safety – Part 1: Forged steel components, Grade 8”. See also Chapter 5.3.1, "Tools and operating materials".

Lifting accessories

- Attachment swivel (Fig. 4), min. grade 8, swivelling 360° with self-aligning rotatable eye (180°). Most current sizes used at EWIKON: M8, M10, M12 and M16.

Lifting accessories which are required or admitted only for certain installation work:

- Lifting beam (Fig. 5), for specifications please see suppliers of lifting beams.
- Spacer bolt for attachment swivel (Fig. 6), allowed for L2X systems only, can only be purchased from EWIKON. The spacer bolts must not be used for other transport processes! They should only be used when attachment swivels can not be used for lack of space.

Slings (to be used only with attachment swivels)

- Assembled chain slings (Fig. 7), according to DIN EN 1677 „Components for slings - Safety - Part 1: Forged steel components, Grade 8“ (with metal tag acc. to DIN 685). The octagonal red metal tags should show information about load capacities for usual modes of assembly.
- Webbing slings (Fig. 8) and round slings (Fig. 9) with sewn in label indicating the working load limit for common modes of assembly (for specifications see suppliers of webbing slings and round slings).

Overview of lifting accessories and slings:

Figure 4: Attachment swivel	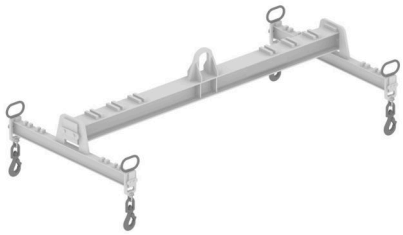 Figure 5: Lifting beam	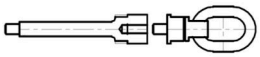 Figure 6: Spacer bolt for attachment swivel
Figure 7: Assembled chain sling	Figure 8: Webbing sling	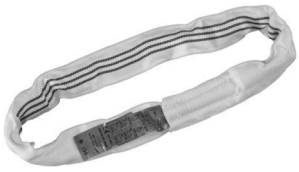 Figure 9: Round sling

5.1.3 Checking the lifting accessories and slings before use

- Lifting accessories and slings have to be checked regularly at intervals not exceeding 12 months by a qualified person. Inspection tags showing the expiration date of the current period of use should be attached directly to the lifting accessories and slings.
- A visual inspection of the lifting accessories and slings for damage has to be carried out before each use. As soon as the replacement state of wear, i.e. a defined wear characteristic, has been reached, the lifting accessories or slings must not be used any longer.
- Chains must not show any mechanical damage such as crushing, dents, deformations, expansions or cracks.
- Webbing slings must not show any yarn breaks, yarn cuts, damage to load bearing seams and deformations caused by heat or must not be subject to aggressive substances (acids, alcalis/bases, solvents).

5.1.4 Attachment points

Attachment points can be placed on the upside or on the side surfaces of the hot runner system or the hot runner component. Other possible attachment point positions are:

- Hot half (see Fig. 10):
  Upside (position A): used when removing the goods from the transport crate or on transport Side surface (positions B and C): used on transport and installation
- Manifold (see Fig. 11):
  Upside (position A): used when removing the goods from the transport crate or on installation Side surface (position B): used when turning the manifold around
- L2X-System (see Fig. 12):
  Upside (position A): used when removing the goods from the transport crate oder on transport Downside (position D): used on installation

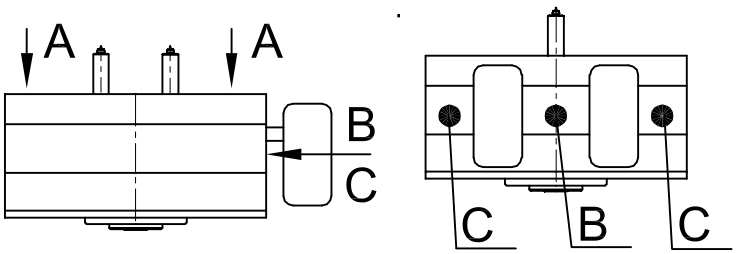

Figure 10: (z362-01 / z362-02) Possible attachment points to a hot half

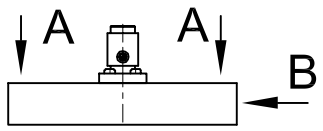

Figure 11: (z362-03) Possible attachment points to a manifold

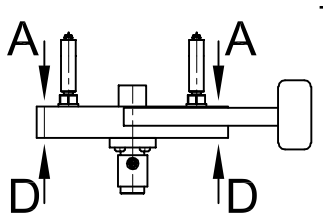

Figure 12: (z362-07) Possible attachment points to an L2X system

5.1.5 Working load limit for lifting accessories and slings

Before transport the working load limit for the used lifting accessories and slings must be checked in the following order:

1. How heavy is the load?

- The weight of single components, systems or hot halves is indicated on the EWIKON note of delivery (net weight, without packaging).
- If this information is not available anymore the weight can be estimated. However, there should be a sufficient margin up to the load limit of the lifting accessories and slings. The mass can be determined using the formula m = ρ * V. Use the density of steel (ρ = 7,85 g/cm^3) for your calculation. The calculated result automatically includes a sufficient safety margin because possibly existing hollow spaces or areas made of lighter materials are calculated using the density of steel. Calculate the volume of a hot half or a nozzle side with V = L x B x H [cm^3]. Possibly protruding areas (nozzles, wiring box) do not have to be taken into consideration. The volume of a manifold (without nozzles) or an L2X system (nozzles have already been screwed to the manifold) can be approached using the largest external dimensions of the manifold (L = largest linear expansion, B = largest width expansion, H = thickness of manifold).

2. Identify attachment points

- Where are the attachment points positioned (transport threads)?
- How many attachment points are available for specific transport situations?
- What are the thread sizes of the transport threads?

3. Is one single attachment point sufficient to lift the load vertically stretched or is more than one attachment point necessary to lift the load?

- Only for the transport of hot halves, nozzle sides or individual mould plates usually one single attachment point is sufficient (see Fig. 13) as the gravity centre usually coincides with the attachment point! In this case the lifting capacity is 100 %. (see Tab. 8)
- At least 2 attachment points are necessary to lift manifolds or L2X systems as otherwise it will not be possible to lift the load in a directed way. This is often absolutely necessary when carrying out installation work. When 2 attachment points are used to lift loads the following situations have to be distinguished:
  - The load is distributed between two evenly stressed but sloping legs (see Fig. 14). The maximum load has to be reduced corresponding to the angle of inclination α (see Tab. 8).
  - The load is distributed between two evenly stressed but vertically stretched legs (angle of inclination α = 0°) (see Fig. 15). To apply force correctly the use of a lifting beam is absolutely necessary.
  - If the centre of gravity is asymmetric loads should be lifted using more than 2 attachment points. It can be helpful to use a lifting beam.
  - If spacer bolts for attachment swivels are used it is absolutely necessary to use a lifting beam to enable a correct application of force via vertically stretched legs (see Fig. 16). If the load is lifted using sloping legs, a force will be generated causing a side load in the screw-in thread. Breakage risk arises (see Fig. 17).

4. Are the lifting accessories and slings approved for the respective modes of assembly?

- Is the allowed maximum weight respected?
- Is the load capacity reduced due to the specific lifting arrangement?

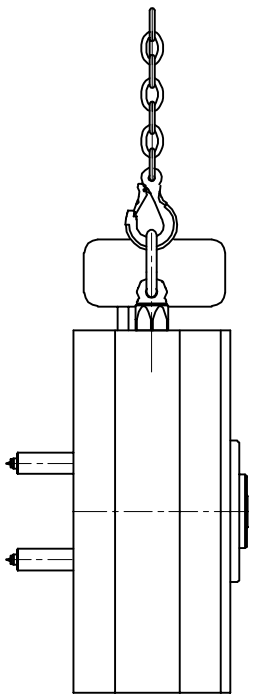

Figure 13: (z362-06) Lifting a load using one single attachment point (example: hot half in vertical position)

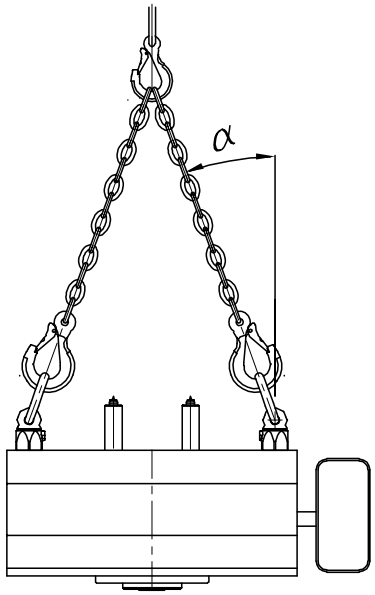

Figure 14: (z362-04) Lifting a load using 2 attachment points, distributed between two evenly stressed but sloping legs (example: hot half in horizontal position)

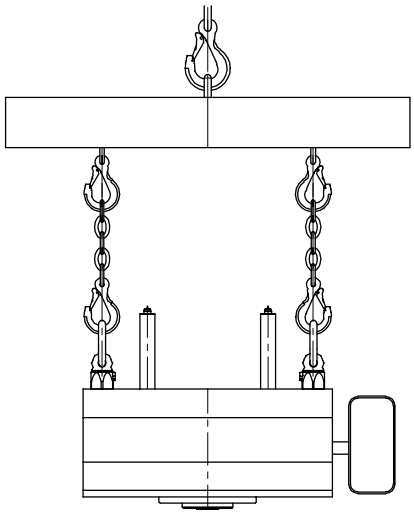

Figure 15: (z362-05) Lifting a load using 2 attachment points, distributed between two evenly stressed but vertically stretched legs (example: hot half in horizontal position)

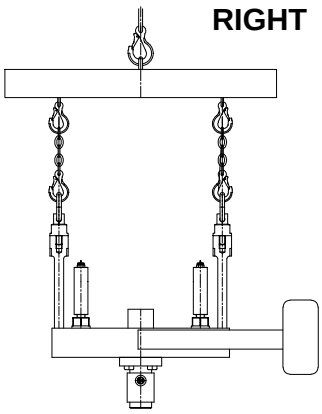

Figure 16: (z362-08) How to lift a load correctly using spacer bolts for attachment swivels (L2X system)

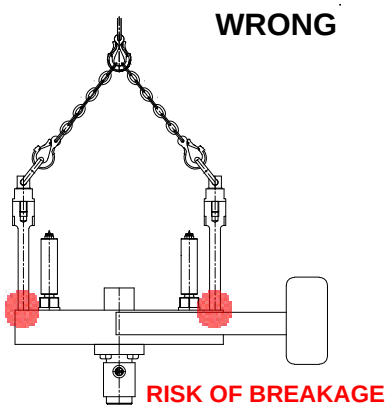

Figure 17: (z362-09) How to lift a load incorrectly using spacer bolts for attachment swivels (L2X system)

Angle of inclination	Load capacity of each leg of a 2-leg chain sling	Load capacity of the 2-leg chain sling
0 °	100 %	2 x 100 %
up to 45 °	70 %	2 x 70 %
45 ° up to 60 °	50 %	2 x 50 %
above 60 °	Use not permitted	

Table 8: Assessment of stress of slings (source: BGI 556, for detailed information see above)

5.1.6 Removal from transport crate

How to remove a hot half, an L2X system or a manifold from a transport crate or a pallet (see Fig. 14, Fig. 15 bzw. Fig. 16).

- Open transport crate with suitable tools.
- Remove packaging material.
- Check hot half, L2X system or manifold for damage.

- Screw in attachment swivels and affix them to a crane (most products can be lifted out of the transport crate without having to remove the walls of the crate).
- Carefully lift hot half, L2X system or manifold vertically upwards and place it on a safe and non-slip surface (if system can be placed without damage) or on a safe substructure (e.g. for L2X system).

5.1.7 Transport and movement during installation

NOTE

Consider reduced load capacity of attachment swivels!

For the installation work described below the attachment swivels are loaded at changing inclination angles. Depending on the manufacturer and design of the attachment swivel the maximum possible load capacity must no longer be utilized. If the attachment swivels recommended by EWIKON are used for such installation work (see Chapter 5.1.2, "Recommended lifting accessories and slings"), the maximum load capacity of an attachment swivel should always be reduced by at least the half.

Using wooden laths to move hot runner assemblies

- The surface to be used must be safe and non-slip.
- Height H of the wooden lath must only be high enough to enable a tilting of the hot runner assembly. Additionally, height H must be considerably smaller than width B (H<<B) to prevent the hot runner assembly from slipping (see Fig. 18).
- The contact surface L x B of the wooden lath must be large enough to prevent the hot runner assembly from slipping away while it is being moved (see Fig. 18).
- If possible the wooden lath should cover the whole length L of the hot runner assembly (see Fig. 19).

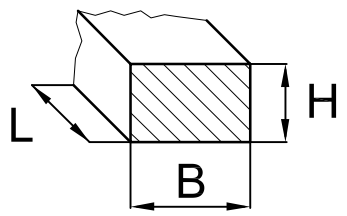

Figure 18: (z362-12) Dimensions of a wooden lath

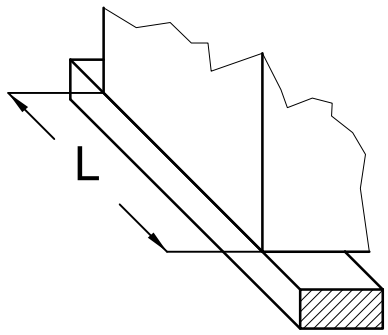

Figure 19: (z362-13) Positioning a hot runner assembly on a wooden lath

Putting hot runner assemblies (hot halves, mould plates, manifolds or L2X systems) from lying (horizontal) into upright (vertical) position.

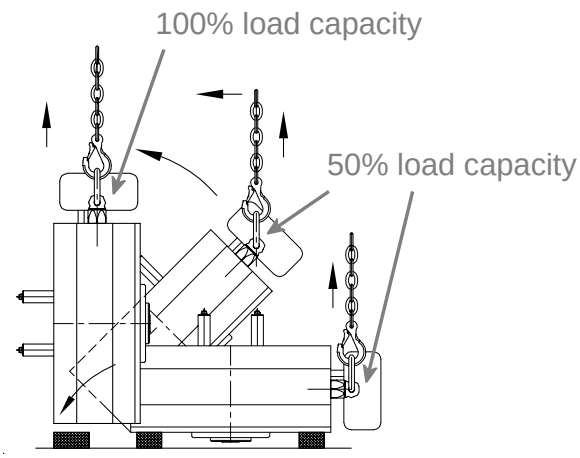

Figure 20: (z362-10) Putting hot runner assemblies (hot halves or mould plates or manifolds) from lying (horizontal) into upright (vertical) position

1. The hot runner assembly must be placed on an even, non-slip surface.
2. Screw in attachment swivels and affix them to a crane.
3. Put a wooden lath on the working surface and secure against slipping. It has to be positioned in such a way that when the external lateral surface of the hot runner assembly is erected it can be supported by the wooden lath.
4. Slowly lift the hot runner assembly until the lateral surface touches the wooden lath. Continue lifting the assembly until it reaches upright position following the movement of the hot runner assembly with the crane so that the crane hook is always perpendicular to the attachment point.
5. When the hot runner assembly hangs freely in upright position, remove the wooden lath and carefully place the hot runner assembly on a surface or move it using a crane.

Putting hot runner assemblies (hot halves, mould plates, manifolds or L2X systems) from upright (vertical) into lying (horizontal) position.

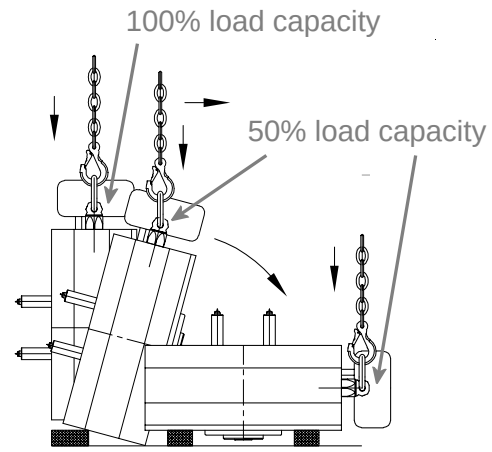

Figure 21: (z362-11) Putting hot runner assemblies (hot halves, mould plates or manifolds) from upright (vertical) into lying (horizontal) position.

1. Put a wooden lath on the working surface and secure against slipping. It has to be positioned in such a way that the external lateral surface of the hot runner assembly can rest on the wooden lath when it is dropped.
2. Use the crane to position the freely hanging hot runner assembly over the wooden lath.
3. Slowly drop the hot runner assembly until the external lateral surface touches the wooden lath. Continue dropping the hot runner assembly carefully until it tilts and touches the working surface. Follow the tilting movement of the hot runner assembly with the crane so that the crane hook is always perpendicular to the attachment point.
4. Carefully put the hot runner assembly on the working surface following the movement of the hot runner assembly with the crane so that the crane hook is always perpendicular to the attachment point. Make sure there is a solid substructure so that protruding components are not damaged.

NOTE

Pay attention to system characteristics

The work steps described just show how to move the system most commonly. Depending on the system layout further measures which have to be determined individually may be necessary to move and assemble hot runner assemblies in a safe way. The chapters 5.1.2 "Recommended lifting accessories and slings" und 5.1.5 "Working load limit for lifting accessories and slings" must be paid attention to.

- Particularly for L2X drop-in systems many system versions are possible. When any transport or assembly work is carried out it has to be ensured that protruding components (e.g. nozzles, heater outlets or wiring) as well as components with reduced stability (e.g. wiring channels, connection boxes or connection blocks for supply lines) are not damaged. It may be necessary to use additional lifting accessories and slings as well as specific substructures to support the hot runner assembly.
- A second crane may be necessary to turn the hot runner system completely to avoid accidents and damage to components.

5.2 General safety instructions

DANGER

Installation with activated voltage supply

Risk of death by electric shock and severe injuries caused by live components.

- During all installation steps that do not require heating, the hot runner components and the injection mould must be disconnected from the power source.

WARNING

Sharp edges

- Cut injuries to body and extremities, mainly to the hands.

WARNING

Heavy components

- Crushing of fingers or hand.

WARNING

Check of live components before installation

The electrical equipment of the hot runner system should be checked, especially those areas which will no longer be accessible after installation. Physical injuries such as an electric shock can be prevented that way.

Please check

- if cables are kinked or squeezed.
- if cable insulations are undamaged.

WARNING

Pressurized systems

All hydraulic or pneumatic supply lines must be depressurised during installation.

- Injuries caused by flying parts or “whipping” hoses.
- Injuries to eyes caused by escaping pressurised liquids.

Recommended PPE,
see also Chapter 2.5.1:

CAUTION

Control of the given tolerances while checking important dimensions

All given tolerances must be checked before initial installation. Failure to do so may result in leakage during operation, damage to nozzles and other components of the mould and severe injuries to persons such as burns caused by leaking plastic melt.

Machining the tip sealing area in the contour plate

The tip sealing areas should be ground or milled to fit but not eroded; otherwise leakage may be possible during operation.

Cleanliness of sealing surfaces

Prevent sealing surfaces from being damaged by dirt or unsuitable cleaning tools. Failure to do so may result in leakage during operation or damage to the sealing surfaces during installation.

NOTE

Intended use

Damage to the HPS III hot runner system and/or components of the surrounding injection mould.

- The HPS III hot runner system must only be installed in a matching injection mould.

Recommended auxiliary materials (tools) and operating materials for the following installation steps

The use of non-approved assembly tools may result in damage to the hot runner system (for recommended auxiliary and operating materials please see Chapter 5.3.1, "Tools and operating materials").

Ambient conditions during installation

Make sure that the hot runner components are protected from direct humidity during assembly.

Dimensional check (for details please also see Chapter 5.4, "Checks before installation")

Check of the given installation dimensions, fit sizes, form and location tolerances of the mould plates surrounding the hot runner system (for information please see the current catalogues in the download section on www.ewikon.com). The following dimensions have to be checked in particular:

- Mould plate dimensions.
- Height dimensions (e.g. X dimension).
- Fit sizes (e.g. in the tip sealing area).
- Gap dimensions.

Cleaning

- Clean the installation space.
- Make sure the sealing surfaces (contour plate/tip insert, nozzle/manifold) are clean. If necessary clean sealing surfaces with suitable cleaning tools (brass brush or brass scraper). Prevent sealing surfaces from being damaged by dirt or unsuitable cleaning tools. You have to heat up the HPS III-MH nozzles (processing temperatures) before cleaning them. Failure to do so may result in leakage during operation or damage to the sealing surfaces during installation.

Pay attention to temperatures during installation

The HPS III hot runner system has to be installed when it is cold (room temperature) (exception: L2X systems). Excessive temperatures during installation may result in damage to the melt sealing area and thus leakage during operation.

Mechanical stress on cable ends

The cable ends must not be subject to tensile stress.

Protect the cable ends

When wiring the system make sure that the thermo and power lines do not protrude from the outer edges of the mould and are protected against damage. The distances between hot runner and cables inside the mould have to be dimensioned in such a way that there is no damage to the components caused by excessive heat.

Secure the connection cables

All connecting cables have to secured in such a way that they do not get pinched when they are installed in the mould (use cable binders and/or covering plates for the recesses).

Observing bending radii

Adhere to bending radii of the coil heater and the thermocouple when doing the wiring. The minimum bending radius is 15 mm. The connection can only be bent once.

Threads of screws and nozzle tips and threaded holes

Make sure all threads are clean and free moving, otherwise screws do not achieve the requested preload when tightened with the given torques. Screw connections may separate due to insufficient preload, possibly resulting in leakage during operation. When screwing in nozzle tips gaps between sealing surfaces may be possible - this may also lead to leakage during operation.

Unless otherwise indicated only use high-temperature lubricant (see Chapter 5.3.1, "Tools and operating materials") to tighten threads in order to ensure the screws can be demounted any time.

Tightening torques

Wrongly chosen torques may lead to an excessive or insufficient preload of screws possibly resulting in leakage during operation due to separated screw connections (insufficient tightening torque) or damage to screws and associated components due to overload (excessive tightening torque).

When insufficient tightening torques are used to screw in nozzle tips gaps may form, when excessive tightening torques are used nozzle tips may be damaged. In both cases this may result in leakage during operation.

Customer-specific torque specifications in assembly drawings, e.g. for special designs, always have to be given priority over differing specifications.

Only the values summarised in this operating manual and in Chapter 9, "Tightening torques" must be used. Also, please consider whether the tightening torques are valid for lubricated or non-lubricated screws.

5.3 Technical Requirements

Specific connections and hoses are used for supply lines (hydraulic, cooling water).

5.3.1 Tools and operating materials

General tools

Tool	Use	Version	EWIKON item no.
Abrasive paper / non-woven web	Exchange of nozzle heater	Various	-
Allen key	For hexagon socket head cap screw according to DIN EN ISO 4062	Depending on system and components.	-
Allen key, extension for allen key	Deinstallation of mould components	Various	-
Assembly lever	Separating mould plates		
Cable markers (cable numbers)	Marking of electrical connections	-	-
Cable tie PA 4.6	Fixation of cables, temperature sensors and shrink hoses	100 mm 150 mm	13590 13591
Chain slings (with metal tag)	Lifting and moving of moulds and components	According to DIN EN 1677 (metal tag according to DIN 685)	-
Crimping tool	Attachment of cable pins to cables	-	-
Depth gauge	Control of check dimensions	-	-
Drift punch	Installation of dowel pins	-	-
Engineers hammer	Maintenance work	-	-
Fabric tube	Protection of cables	Ø 6 mm	13479
Hexagon socket wrench insert	Installation / deinstallation work. Installation with torque wrench only	Closed	
Impact wrench	Deinstallation of a screw bush	1/2 inch adapter	-
Insulation stripping pliers	Stripping of cables	-	-
Key with pilot	For hexagon socket screws according to DIN 6912	Key according to DIN 6911	-
Lifting beam	Lifting and moving of moulds and components	For specifications see manufacturer	-
Mandrel	Installation of cable marker, deinstallation of tip inserts (COOLSHOT)	-	-
Multimeter	Measuring of resistance	-	-
Outside micrometre	Control of check dimensions	-	-
Pin punch	Maintenance work	Various	-
Pipe wrench	Exchange of thermocouples	-	-
Protective jaws	Protection of parts and component surfaces which are serviced in a vice.	Material: aluminium	-
Scraper, soft	Cleaning of e.g sealing surfaces	Preferably brass wire, do not use steel wire	-
Slotted screwdriver	Maintenance work	Various	-
Side cutter	Maintenance work	Preferably side cutter for electronics	-
Soft face hammer	Maintenance work	-	-

Tool	Use	Version	EWIKON item no.
Spacer bolt for swivel eye bolt	Lifting and moving of moulds and components	-	19160
Spreading pliers	Installation of cable marker	-	-
Striking weight	Disassembly work	-	10578
Swivel eye bolt	Lifting and moving of moulds and components	Swivel eye bolt according to Machinery directive 2006/42/EG or DIN EN 1677-1, min. grade 8 = 500 kg load capacity with inclination angle α = 0°. In case of deviations of the angle α > 0° load capacity has to be reduced according to the manufacturers' instructions.	-
Thread adaptor	Deinstallation of a screw bush	M5	280016-15
Torque wrench (calibrated)	For even preload	4-400 Nm (3-295 ft-lb) depending on system and components	-
Torx screwdriver	Maintenance work	Various	-
Vice	Maintenance work	-	-
Webbing slings and round slings	Lifting and moving of moulds and components	For specifications see manufacturer	-
Wire brush, soft	Cleaning of e.g sealing surfaces	Preferably brass wire, do not use brass-coated wire or steel wire	-

Table 9: General tools

Hot runner specific tools

Tool	Use	Version	EWIKON item no.
Adjusting device pro EDGE VG (asm)	Installation of pro EDGE VG tip inserts		T00528-V01
Allen key, extension for allen key	Deinstallation of HPS III-MH clamping covers. Deinstallation of a screw bush. Exchange of seal kits of drive units. Deinstallation / exchange of valve pins	Various	
Allen key with hole	Exchange of seal kits of drive units	Various	17919 19182
Blowtorch / small burner	Exchange of thermocouples	-	-
Centering aid	Assemby of L2X systems	Ø 10 mm/Ø 16 mm	19103/19104
Clamping device	Maintenance of HPS III-MHR nozzles	-	-
Cordless screwdriver	Exchange of valve pin seal of valve gate systems	-	-
Copper drift	Exchange of HPS III-MH thermocouples	-	-
Deduction aid pro EDGE VG (asm)	De- / installation of pro EDGE VG tip inserts		T00525-00
Disassembly sleeve	Deinstallation / exchange of valve pins	Various	See HPS III-NV catalogue
Fixing ring pro EDGE VG	Assembly of pro EDGE VG tip inserts		T00544-V01
Hexagon socket bit	Installation / deinstallation of HPS III-MH clamping covers. Installation with torque wrench only	Various	-

Tool	Use	Version	EWIKON item no.
Hexagon socket wrench insert	Installation / deinstallation of tip inserts. Installation with torque wrench only	Closed	-
Installation wrench	Installation of drive units	Various	See HPS III-NV catalogue
Installation wrench, extension for installation wrench	for L2X nozzles	Various	See L2X catalogue
Levering and striking tool	Disassembly of hot runner nozzles	Soft, preferably massive brass rod with tapered end, various sizes	-
Maintenance mouthpiece	Cleaning of flow channels	-	ask EWIKON
Metal cable tie	Fixation of cables of L2X systems	-	19667
Oxy-acetylene burner	Deinstallation of a screw bush	-	-
Pull bar pro EDGE VG	De- / installation of pro EGDE VG tip inserts		T00524
Retaining flange pro EDGE (VG)	Disassembly of pro EDGE VG tip inserts		T00523
Ring end fitting	Installation / deinstallation of tip inserts. Installation with torque wrench only	Closed	-
Ring spanner insert	Exchange of HPS III-MH thermocouples	-	-
Ring wrench	Deinstallation of tip inserts	Closed	-
Screw or threaded bar	Installation of HPS III-MH tip inserts; De- / installation of pro EDGE VG tip inserts	M4	-
Snap ring pliers	Deinstallation of snap rings of drive units	-	-
Striking weight with forked adapter	Exchange of thermocouples	-	-
Threaded rod for assembly	Assembly of pistons for drive units. Exchange of seal kits. Deinstallation / exchange of valve pins	Various	See HPS III-NV catalogue
Tubular hexagon spanner	Installation of valve pins	Various	See HPS III-NV catalogue

Table 10: Hot runner specific tools

General operating materials

Operating material	Use	Version	EWIKON item no.
(Fully synthetic) High performance grease	Lubrication of components in injection moulds such as ejectors, sliders and guide pillars as well as all moving and sliding mould components. Lubrication of polymer seals.	VGS 180, Meusburger GmbH. Dispenser 180 g Can 900 g Operation temperature up to 180°C	HB00002 HB00003
Silicon heat transferring paste P12	For thermocouples	Collapsible tube (20 ml)	10023
WD 40 penetrating oil	Exchange of thermocouples	-	-

Table 11: General operating materials

Hot runner specific operating materials

Operating material	Use	Version	EWIKON item no.
Engineers blue	Blueing of all surfaces where the manifold touches the mould.	Customary	-
High temperature (metal-compound) installation paste	Apply to all screw threads to ensure that the screws can be loosened/removed	Ciric A, Molyduval GmbH Collapsible tube (100g) . Operation temperature up to 1200°C	17363
Industrial adhesive	Gluing of guide bushes for synchronous plate systems into the synchronous plate	Loctite 648 HG, Henkel	-
Solid-free high-temperature grease	Lubrication of components of pro EDGE VG	VGI 300, Meusburger GmbH Can 20 g Application temperature up to 300°C	26095

Table 12: Hot runner specific operating materials

5.3.2 Standard parts

NOTE

Only use approved standard parts

Damage to the HPS III hot runner system and/or components of the surrounding injection mould.

- Only standard parts which are approved for operation in EWIKON hot runner systems must be used.

The following standard parts with the associated standards are approved for EWIKON hot runner systems. Particularly for screws the associated strength classes (see Chapter 5.5, "Montage und Einbau") and tightening torques (compare Chapter 9, "Tightening torques") must be adhered to.

Standard part	Valid standard	Invalid/old standard
Hexagon socket head cap screw (property class 12.9)	DIN EN ISO 4762 (ISO 4762)	DIN 912
Hexagon socket head cap screw - low head, with pilot recess (property class 12.9)	DIN 6912	-
Countersunk screw	DIN EN ISO 10642 (ISO 10642)	DIN 7991
Parallel pin	DIN EN ISO 2338 (ISO 2338)	DIN 7
Parallel pin with internal thread	DIN EN ISO 8735 (ISO 8735)	DIN 7979
Flat washer	DIN EN ISO 7089 (ISO 7089)	DIN 125-1 (DIN 125)
Flat washer	DIN EN ISO 7092 (ISO 7092)	DIN 453-1 und DIN 433-2
Feather key	DIN EN ISO 773 (ISO 773)	-
Lock ring	DIN 471	-
Split pin	DIN EN ISO 8752 (ISO 8752)	DIN 1481

Table 13: Approved standard parts for EWIKON systems

5.4 Checks before installation

The HPS III hot runner system is subject to comprehensive testing by the manufacturer before delivery. For safety reaons (transport or storage damage or damage to the hot runner system when preparing installation) we recommend that you check the hot runner systems for damage just before installing it. To exclude any damage during installation all information about checks which are part of this operating instructions must be adhered to.

5.4.1 Notes on mould layout

The following factors must be observed for the mould layout:

- Installation notes for the mould design
- Mould stability
- Sealing of the hot runner system
- Cooling
- Material
- Preload (calculation of gap dimension)
- Check of gate diameter

NOTE

See the EWIKON HPS III catalogue, chapter 5 “General assembly notes”, for a detailed description of general assembly notes and mould layout. The current version of the catalogue can be found on www.ewikon.com in the download section.

5.4.2 Standard dimensions of hot runner systems

All given installation dimensions, fit sizes, form and location tolerances of the mould plates surrounding the hot runner system have to be checked (for specifications please refer to the current catalogues on www.ewikon.com in the download section and/or the attached order-related documents). An overview of all relevant dimensions is given in the subsequent graphic. Particularly the following dimensions have to be checked:

- Check of the fit sizes in the tip sealing area / sealing collar of the tip insert and the installation contour of the mould plate.
- Height dimensions (X dimension, thickness of the clamping plate) have to be checked.
- Measuring of the mould plate: important for calculating the installation depth of the nozzle (X dimension).
- Thickness of the nozzle retainer frame plate (at at least 2 different ends of the plate)
- Installation depth for nozzle (from the contact surface of the nozzles to the top edge of the mould plate).
- Installation depth of pressure piece with centering (from the contact surface of the pressure pad until its top edge).
- Thickness of the manifold with screwed-in pressure pads H3 (from top side of pressure pad to nozzle sealing surface of the respective nozzle).
- Actual value of the gap dimension ΔS .
- Thickness of the clamping plate. If pressure pads are installed in the clamping plate they also have to be measured and considered when calculating the gap dimension (special design).
  This applies to systems with single nozzles in particular as only the locating ring fixes the single nozzle in the installation space. If there is a gap the injection pressure (pressure build-up around the cavity, if it is filled) causes the nozzle to move back to the locating ring, possibly resulting in leaks.

5.4.3 Dimensions to be checked for a HPS III hot runner system with HPS III-S / pro SHOT nozzles

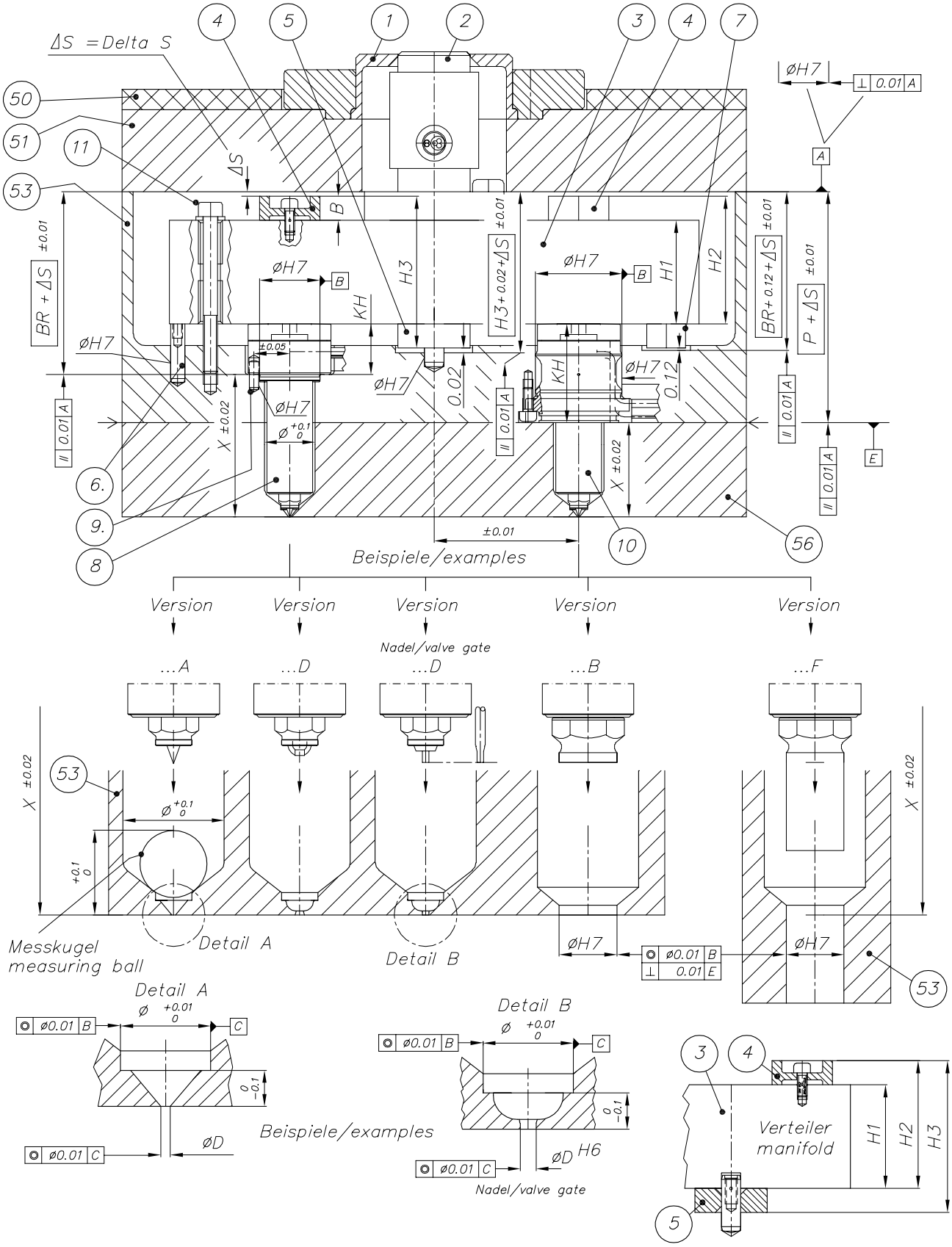

Figure 22: (z349-01) Example: Dimensions to be checked for a HPS III hot runner system with HPS III-S / pro SHOT nozzles for standard installation and front installation

Example: Dimensions to be checked for a HPS III hot runner system with HPS III-S / pro SHOT nozzles for standard installation and front installation

BR	Installation space (for EWIKON parts)
H1	Manifold height
H2	Manifold height + top pressure pad
H3	Manifold height + pressure pad with centering (center support) + top pressure pad
P	Height of nozzle retainer frame plate
B	Height of top pressure pad
KH	Nozzle body height
X	Nozzle length (lower edge of nozzle body to article surface)
ΔS	Gap dimension delta S is achieved by: frame plate provided with allowance (pos. 52) as shown in the drawing (recommended by EWIKON) or grinding of the top pressure pads on the manifold.

Pos. 1	Locating ring
Pos. 2	Sprue bush
Pos. 3	Manifold
Pos. 4	Top pressure pad (depending on nozzle type)
Pos. 5	Pressure pad with centering (centre support)
Pos. 6	Lock against rotation of manifold
Pos. 7	Tilting preventing pad of manifold (depending on order)
Pos. 8	HPS III-S / pro SHOT nozzle for standard installation
Pos. 9	Fixation of nozzle (lock against rotation for tip exchange in the mould)
Pos. 10	HPS III-S / pro SHOT nozzle for front installation
Pos. 11	Screw connection for manifold (The screw connection for the manifold is only required when nozzles for standard installation are used. **When nozzles for front installation are installed the manifold must not be screw connected.**)
Pos. 50	Insulating plate
Pos. 51	Clamping plate (e.g. 1.2312) > 1000 N/mm²
Pos. 53	Nozzle retainer frame plate (e.g. 1.2312) > 1000 N/mm²
Pos. 56	Contour plate

5.5 Montage und Einbau

NOTE

Read operating manual

Before starting installation, the installation procedure described and all warnings, safety and installation instructions listed must be read and understood.

Furthermore, during installation the warning, safety and installation notes for installation of EWIKON systems and components as specified in Chapter 5.2, "General safety instructions" must be followed.

NOTE

Dimensional check

Before installation the installation dimensions as listed in Chapter 5.4, "Checks before installation" must be checked and compared with the values provided with the installation drawing.

Use approved standard parts only

Only standard parts which are approved for use in EWIKON systems must be used. See Chapter 5.3, "Technical Requirements".

Warnings and safety instructions

The following warnings and safety instructions must be observed when installing **all** types of HPS III systems and nozzles, and apply to all installation steps. Additional specific instructions are listed for each installation step.

DANGER

Installation with activated voltage supply

Risk of death by electric shock and severe injuries caused by live components.

- During all installation steps that do not require heating, the hot runner components and the injection mould must be disconnected from the power source.

WARNING

Sharp edges

- Cut injuries to body and extremities, mainly to the hands.

WARNING

Heavy components

- Crushing of fingers or hand.

WARNING

Check of live components before installation

The electrical equipment of the hot runner system should be checked, especially those areas which will no longer be accessible after installation. Physical injuries such as an electric shock can be prevented that way.

Please check

- if cables are kinked or squeezed.
- if cable insulations are undamaged.

5.5.1 Design of valve gate systems with individual drive units and synchronous plate systems for HPS III-S / pro SHOT nozzles for standard and front installation

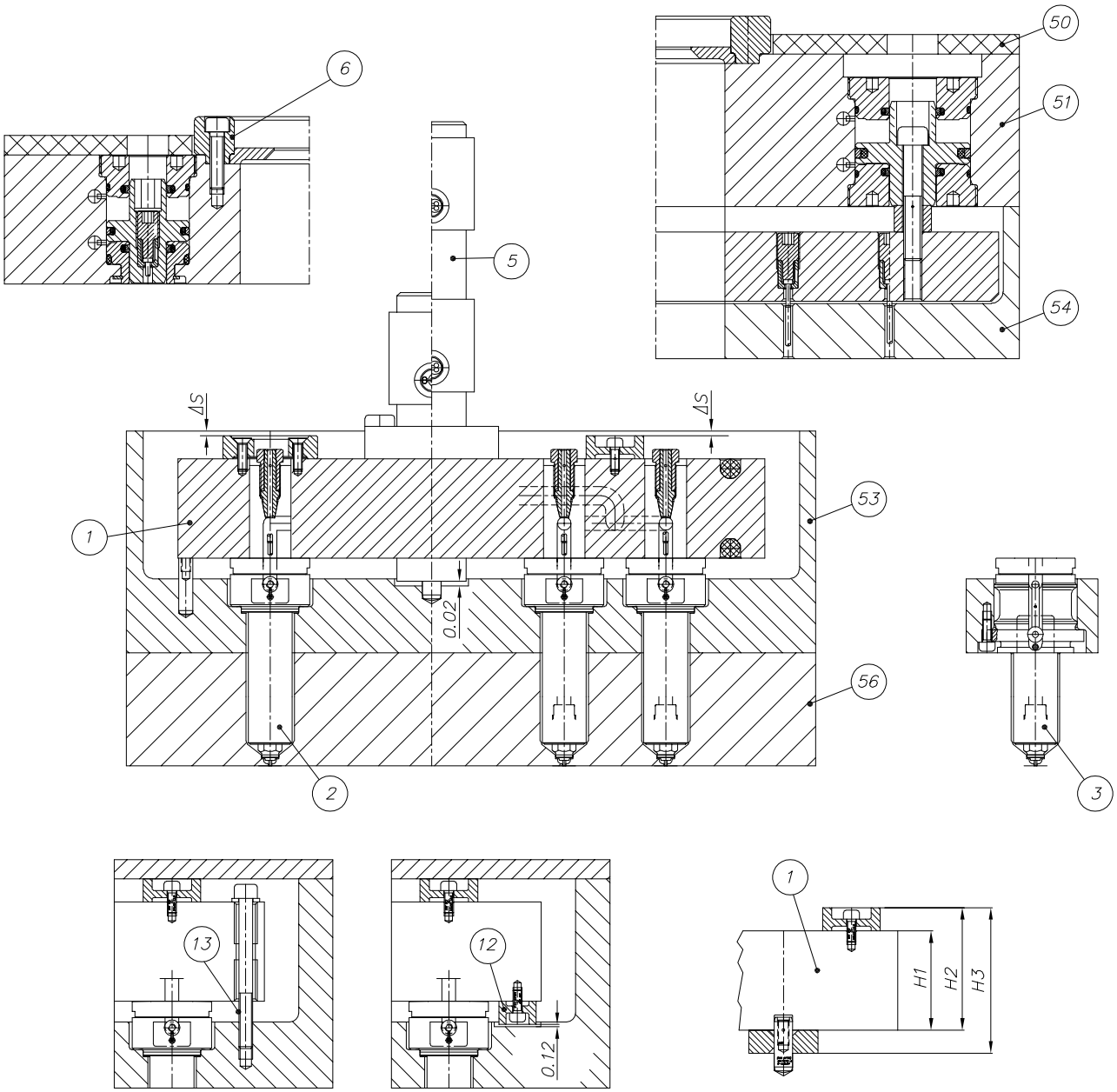

Figure 23: (z381-01) General layout of a valve gate system with with individual drive units and synchronous plate systems for HPS III-S / pro SHOT nozzles for standard and front installation

Design of valve gate systems with individual drive units and synchronous plate systems for HPS III-S / pro SHOT nozzles for standard and front installation

Pos. 1	Manifold
Pos. 2	HPS III-S / pro SHOT VG nozzle for standard installation
Pos. 3	HPS III-S / pro SHOT VG nozzle for front installation
Pos. 5	Sprue bush
Pos. 6	Locating ring
Pos. 12	Tilting preventing pad (depending on order)
Pos. 13	Screw connection for manifold (only for standard installation)
Pos. 50	Insulating plate
Pos. 51	Clamping plate
Pos. 53	Nozzle retainer frame plate
Pos. 54	Intermediate plate
Pos. 56	Contour plate

NOTE

Replacing nozzles of different generations (e.g. HPS III-S and NVE nozzles with nozzles from the pro SHOT series) is not permitted!

Nozzles of different generations often differ in terms of their heating design. Direct replacement is therefore not permitted in most cases.

Before replacing or upgrading, it is mandatory to consult EWIKON to verify compatibility and possible alternatives.

NOTE

Screw connection for manifold

The screw connection for the manifold (pos. 13) is only required when nozzles for standard installation are used. **When nozzles for front installation are installed the manifold must not be screw connected.**

5.5.2 Installation of a HPS III-S / pro SHOT VG valve gate nozzle

Installation of a HPS III-S / pro SHOT VG valve gate nozzle for standard installation

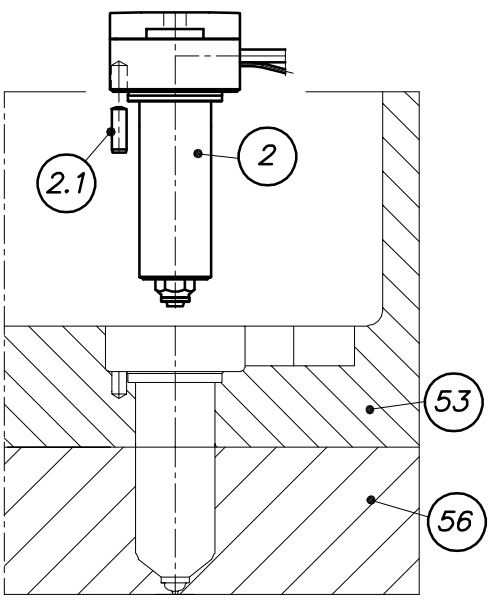

Figure 24: (z342-02) Standard installation of a HPS III-S / pro SHOT valve gate nozzle

ATTENTION: All warnings and safety instructions listed in Chapter 5.5 must be read and understood before starting installation.

Recommended PPE,
see also Chapter 2.5.1:

1. Screw contour plate (pos. 56) and nozzle retainer frame plate (pos. 53) together.
2. Insert the dowel pin (pos. 2.1, ISO 2338-A, lock against rotation for tip exchange) in the corresponding cutout in the nozzle retainer frame plate. **Attention: HPS III-S nozzles with flow channel diameter Ø 3 mm and 4.5 mm require no dowel pin. This installation step is omitted.**
3. Insert the nozzle (pos. 2) carefully and without tilting into the nozzle retainer frame plate and the contour plate. The sealing collar of the tip insert must not be damaged. Pay attention to the position of the dowel pin. At the same time carefully bend the connection cables of the nozzle according to the position of the cable channels. The minimum bending radius is 15 mm. The connection cables can only be bended once.
4. Place the connection cables in the cable channels and mark them according to their function (power / thermocouple) and position in the mould.

Installation of a HPS III-S / pro SHOT VG valve gate nozzle for front installation

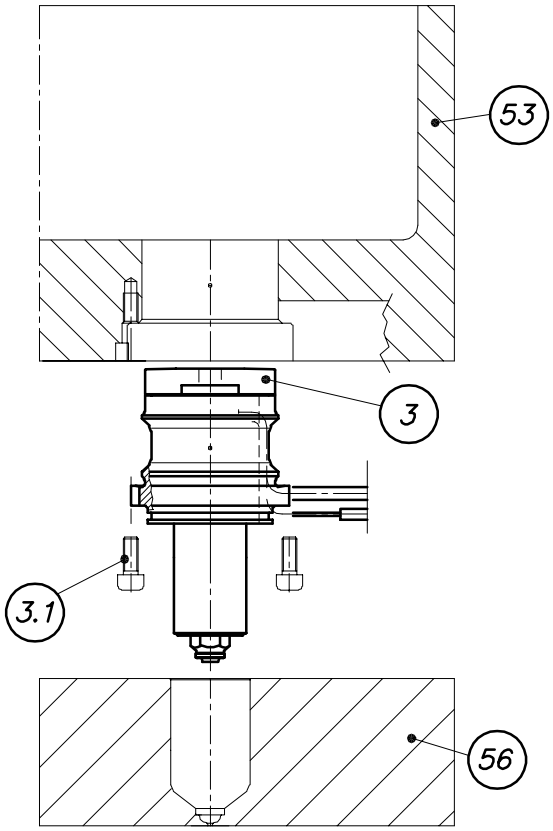

Figure 25: (z342-03) Front installation of a HPS III-S / pro SHOT VG valve gate nozzle

ATTENTION: All warnings and safety instructions listed in Chapter 5.5 must be read and understood before starting installation.

Recommended PPE,
see also Chapter 2.5.1:

1. Install the nozzle (pos. 3) in the nozzle retainer frame plate (pos. 53). At the same time carefully bend the connection cables of the nozzle according to the position of the cable channels. The minimum bending radius is 15 mm. The connection cables can only be bended once. Fix the nozzle (pos. 3) by screwing in two socket head screws (pos. 3.1, ISO 4762 - min. 8.8) up to the stop. Tighten with matching torque. See Chapter 9.2, "Tightening torques for manifold screw connections and retaining screws".
2. Place the connection cables in the cable channels and mark them according to their function (power / thermocouple) and position in the mould.
3. Carefully slide the contour plate (pos. 56) over the nozzle. The sealing collar of the tip insert must not be damaged. Screw contour plate and nozzle retainer frame plate together.

5.5.3 Manifold installation

Preliminary measures

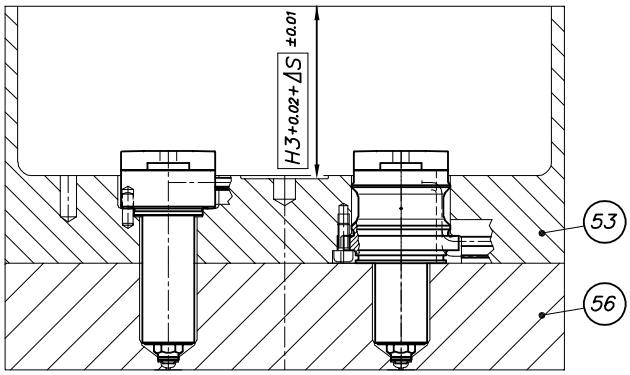

Figure 26: (z342-04) Check of reference dimensions before installation of manifold (left: standard installation, right: front installation)

After nozzle installation check the dimension **H3 + 0.02 + ΔS** between the upper surface of the nozzle retainer frame plate (pos. 53) and the contact surface for the centre support of the manifold and compare it to the value given in the drawing provided by EWIKON.

Installation of the sprue bush on the manifold

NOTE

The installation process described in the following will only be required if a sprue bush is delivered as spare part.

A new manifold has the sprue bush pre-installed.

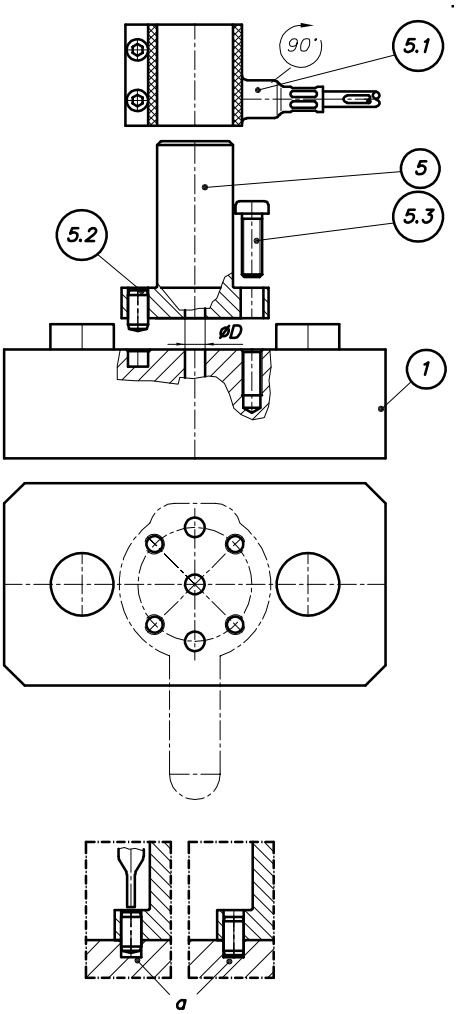

Figure 27: (z341-05) Installation of a sprue bush

ATTENTION: All warnings and safety instructions listed in Chapter 5.5 must be read and understood before starting installation.

1. The diameter D of the sprue bush (pos. 5) must be identical to the diameter of the flow channel entrance in the manifold (pos. 1).
2. Insert dowel pins (pos. 5.2, ISO 8735) through the bores in the sprue bush into the fit bores in the manifold.
3. Screw in the socket head screws with flat head (pos. 5.3, DIN 6912 - 10.9) crosswise and tighten with matching torque. See Chapter 9, "Tightening torques".
4. Drive the dowel pins (pos. 5.2) to the end of the fit bores in the manifold by using a punch (pos. α). The front diameter of the punch should always be smaller than the tapped blind hole bore in the dowel pin in order not to damage the thread.
5. Install the heater band (pos. 5.1) approx. 5 mm above the socket head screws (pos. 5.3) and tighten it.

Manifold installation - installation procedure

NOTE

Blueing of nozzles for front installation

Before blueing nozzles for front installation the contour plate (pos. 56) must be installed because otherwise the transfer of the blue is falsified.

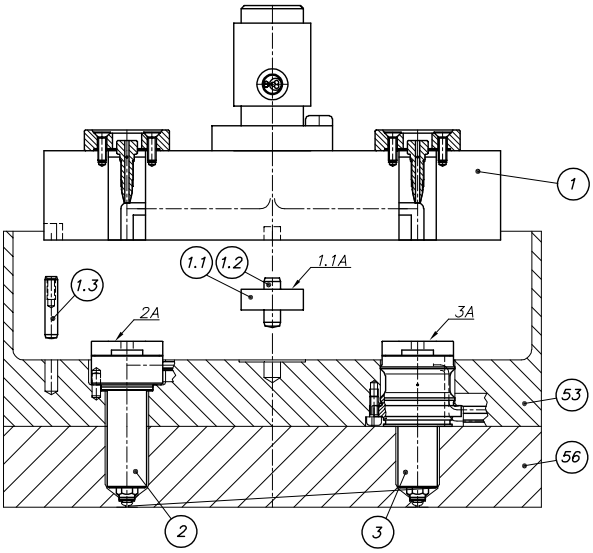

Figure 28: (z342-05) Installation of manifold (left: standard installation, right: front installation)

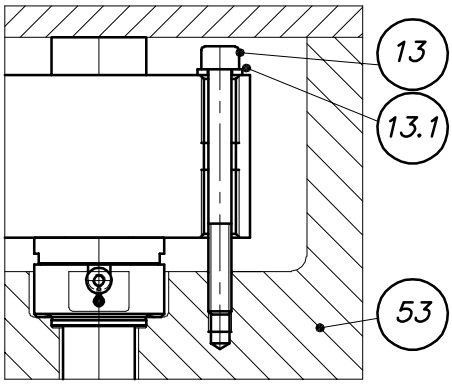

Figure 29: (z345-14) Screw connection for manifold with socket head screws (only for standard installation!)

ATTENTION: All warnings and safety instructions listed in Chapter 5.5 must be read and understood before starting installation.

Recommended PPE,
see also Chapter 2.5.1:

1. Insert the locating pin (pos. 1.2, ISO 8735) of the centre support (pos. 1.1) into the corresponding bore in the nozzle retainer frame plate (pos. 53).
2. Slide the centre support over the locating pin.
3. Insert the dowel pin (pos. 1.3, lock against rotation, ISO 8735) into the bore.
4. Apply a thin and even coat of engineer's blue to the faces of the nozzle heads (surfaces 2A and 3A respectively) as well as to the face of the centre support (surface 1.1A) (see above note).
5. Check the position of the connection cables of the nozzles (pos. 2, 3) again and align the connection cables of the manifold (pos. 1) to prevent squeezing when the manifold is installed.
6. Insert the manifold carefully into the nozzle retainer frame plate (pos. 53). Pay attention to the position of the locating pin and the lock against rotation.
7. Remove the manifold again and check the transfer of the blue. The surfaces 2A and 3A must show an even transfer of the blue. The surface 1.1A must show no transfer of the blue because it must have a distance of 0.02 mm to the manifold.
8. Clean all surfaces from engineer's blue and insert the manifold again. Place the connection cables in the cable channels and mark them according to their function (power / thermocouple) and position in the mould.
9. **The manifold must only be screw-connected when using nozzles for standard installation.** Screw the manifold to the nozzle retainer frame plate by using socket head screws (pos. 13, ISO 4762 - min. 8.8) and plain washers (pos. 13.1, ISO 7089). Screw the socket head screws in to the stop, then tighten with matching torque. See Chapter 9.2, "Tightening torques for manifold screw connections and retaining screws".

5.5.4 Installation of single drive units for HPS III-S / pro SHOT VG nozzles

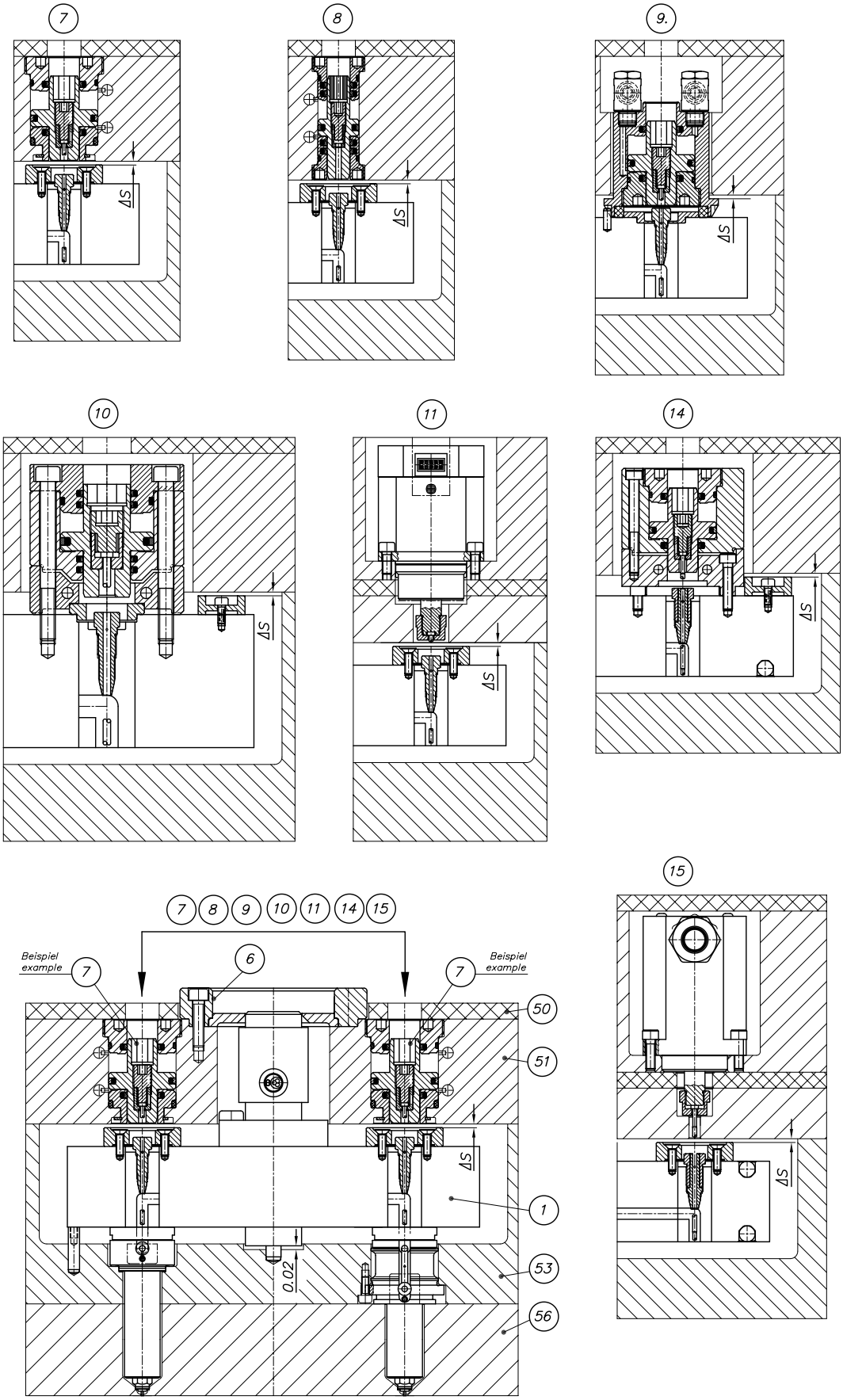

Figure 30: (z342-25) General layout of a valve gate system with single drive units for HPS III-S / pro SHOT VG nozzles for standard and front installation

Installation of single drive units for HPS III-S / pro SHOT VG nozzles

Pos. 1	Manifold
Pos. 6	Locating ring
Pos. 7	Drive unit integrated in clamping plate (version 1)
Pos. 8	Drive unit integrated in clamping plate (version 2)
Pos. 9	Drive unit placed on manifold (coupled)
Pos. 10	Drive unit placed on manifold (screwed-on) (version 1)
Pos. 11	Electric drive unit with step motor
Pos. 14	Drive unit placed on manifold (screwed-on) (version 2)
Pos. 15	Electric drive unit with servo motor
Pos. 50	Insulating plate
Pos. 51	Clamping plate
Pos. 53	Nozzle retainer frame plate
Pos. 56	Contour plate

5.5.5 Drive unit integrated in clamping plate (version 1)

Installation in the clamping plate

WARNING

Pressurized systems

All hydraulic or pneumatic supply lines must be depressurised during installation.

- Injuries caused by flying parts or “whipping” hoses.
- Injuries to eyes caused by escaping pressurised liquids.

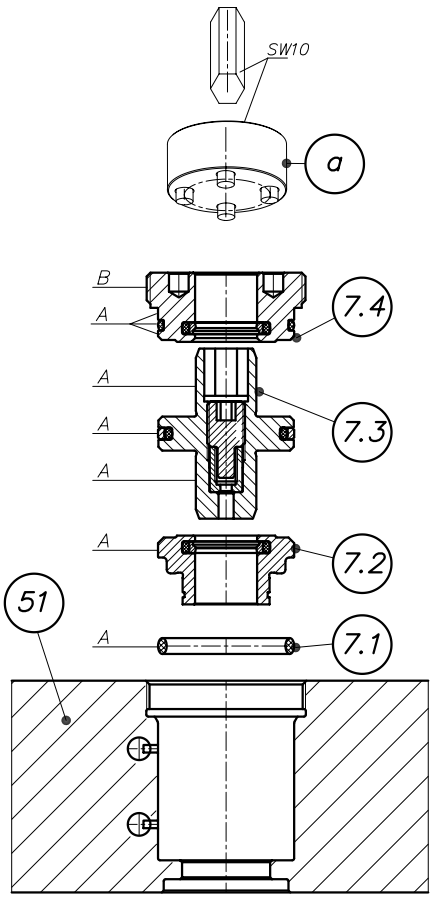

Figure 31: (z342-06) Installation of an integrated drive unit (Version 1)

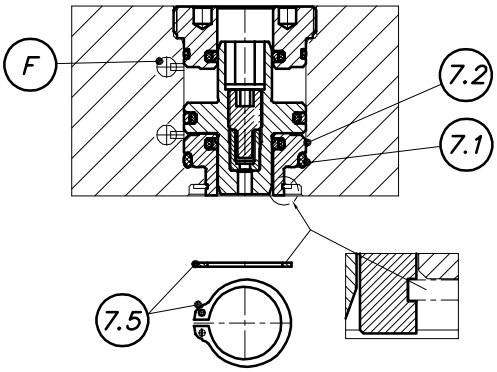

Figure 32: (z342-07) Installation of the circlip

ATTENTION: All warnings and safety instructions listed in Chapter 5.5 must be read and understood before starting installation.

Recommended PPE,
see also Chapter 2.5.1:

1. Apply a thin coat of high performance grease (see Chapter 5.3.1, "Tools and operating materials") to all surfaces marked with (A).
2. Apply high temperature installation paste (see Chapter 5.3.1, "Tools and operating materials") to all surfaces marked with (B).
3. Place the O-ring (pos. 7.1) on the bottom of the cutout in the clamping plate (pos. 51).
4. Insert the housing bottom (pos. 7.2) carefully in order not to damage the O-ring.
5. Slide the screw-in housing cover (pos. 7.4) carefully on the piston (pos. 7.3) in order not to damage the sealing. Insert both components carefully and without tilting so that the piston slides into the housing bottom.
6. Screw the screw-in housing cover into the clamping plate by using the installation wrench (pos. a) and tighten with matching torque. See Chapter 9, "Tightening torques".
7. Connect the supply lines for compressed air / hydraulic fluid to the corresponding connections in the clamping plate.
8. Pressurise the supply bore (F: Forward) (hydraulic pressure max. 50 bar - EWIKON recommendation 30 bar; pneumatic pressure max. 10 bar - EWIKON recommendation 6 bar) so that the piston is fully pushed into the “valve pin closed” position. Thereby the housing bottom compresses the O-ring and is pushed downwards. The notch in the housing bottom becomes accessible.
9. Install the circlip (pos. 7.5, DIN 471) in the notch.
10. Depressurise the piston and all supply lines.

Drive unit integrated in clamping plate (version 1)
Check of clearance ΔS, installation of clamping plate and locating ring

WARNING

Pressurized systems

All hydraulic or pneumatic supply lines must be depressurised during installation.

- Injuries caused by flying parts or “whipping” hoses.
- Injuries to eyes caused by escaping pressurised liquids.

NOTE

All clearances must be checked in cold condition!

In case of deviatons the clearances must be adjusted in an appropriate way (e.g. by machining the nozzle retainer frame plate or the pressure pads of the manifold).

Attention: The adjustment must not have influence on the dimension X of the nozzle!

Checking of clearance when using nozzles for front installation
When nozzles for front installation are installed the contour plate (pos. 56) must be installed before the clearance **ΔS** is checked. Otherwise the measurement is falsified.

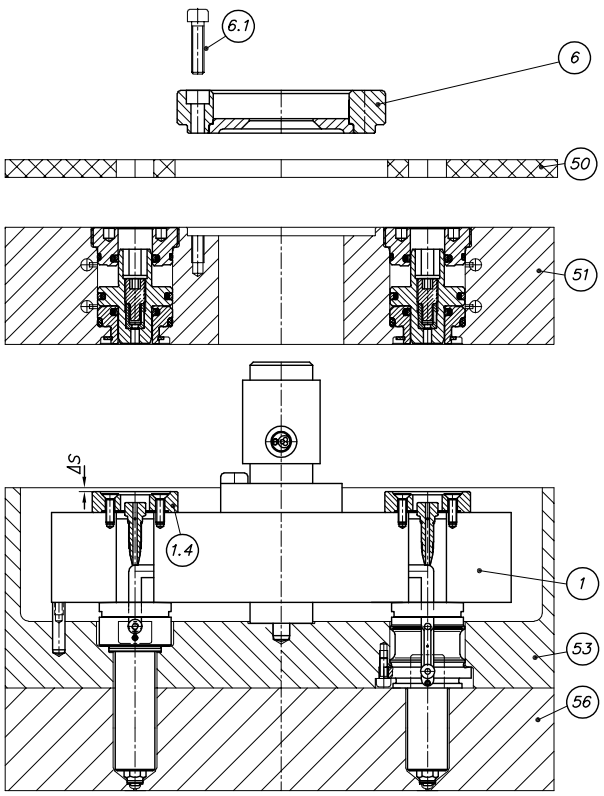

Figure 33: (z342-08) Check of clearance ΔS and subsequent installation steps

ATTENTION: All warnings and safety instructions listed in Chapter 5.5 must be read and understood before starting installation.

Recommended PPE,
see also Chapter 2.5.1:

1. Check the clearance ΔS between the surface of the upper pressure pad (pos. 1.4) and the surface of the nozzle retainer frame plate (pos. 53) and compare it to the value given in the drawing provided by EWIKON.
2. Install the clamping plate (pos. 51) and the insulating plate (pos. 50).
3. Install the locating ring (pos. 6) and fix it with socket head screws (pos. 6.1, ISO 4762 - 12.9). Tighten with matching torque. See Chapter 9, "Tightening torques".
4. Wire the nozzles and the manifold according to the wiring scheme. Please pay attention to the notes in Chapter 5.6, " Electrical connection of hot runner systems".
5. In order to clearly identify the hot runner system attach the type plate included in the delivery prominently to the operator side of the mould.

5.5.6 Drive unit integrated in clamping plate (version 2) - Installation in the clamping plate

Installation in the clamping plate

WARNING

Pressurized systems

All hydraulic or pneumatic supply lines must be depressurised during installation.

- Injuries caused by flying parts or “whipping” hoses.
- Injuries to eyes caused by escaping pressurised liquids.

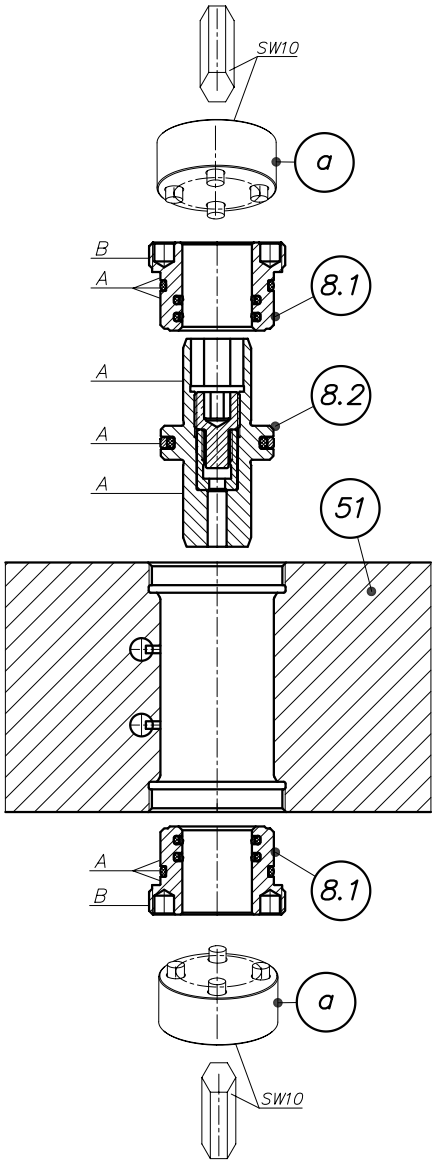

ATTENTION: All warnings and safety instructions listed in Chapter 5.5 must be read and understood before starting installation.

Recommended PPE,
see also Chapter 2.5.1:

1. Apply a thin coat of high performance grease (see Chapter 5.3.1, "Tools and operating materials") to all surfaces marked with (A).
2. Apply high temperature installation paste (see Chapter 5.3.1, "Tools and operating materials") to all surfaces marked with (B).
3. Insert and screw-in the screw-in housing cover (pos. 8.1) into the clamping plate (pos. 51) from below by using the installation wrench (pos. a). Tighten with matching torque. See Chapter 9, "Tightening torques".
4. Slide the screw-in housing cover (pos. 8.1) on the piston (pos. 8.2) from above. Insert both components carefully and without tilting so that the piston slides into the already fitted screw-in housing cover. Be careful not to damage the sealings.
5. Screw the screw-in housing cover into the clamping plate (pos. 51) by using the installation wrench (pos. a) and tighten with matching torque. See Chapter 9, "Tightening torques".

Drive unit integrated in clamping plate (version 2)
Check of clearance ΔS, installation of clamping plate and locating ring

WARNING

Pressurized systems

All hydraulic or pneumatic supply lines must be depressurised during installation.

- Injuries caused by flying parts or “whipping” hoses.
- Injuries to eyes caused by escaping pressurised liquids.

NOTE

All clearances must be checked in cold condition!

In case of deviatons the clearances must be adjusted in an appropriate way (e.g. by machining the nozzle retainer frame plate or the pressure pads of the manifold).

Attention: The adjustment must not have influence on the dimension X of the nozzle!

Checking of clearance when using nozzles for front installation
When nozzles for front installation are installed the contour plate (pos. 56) must be installed before the clearance **ΔS** is checked. Otherwise the measurement is falsified.

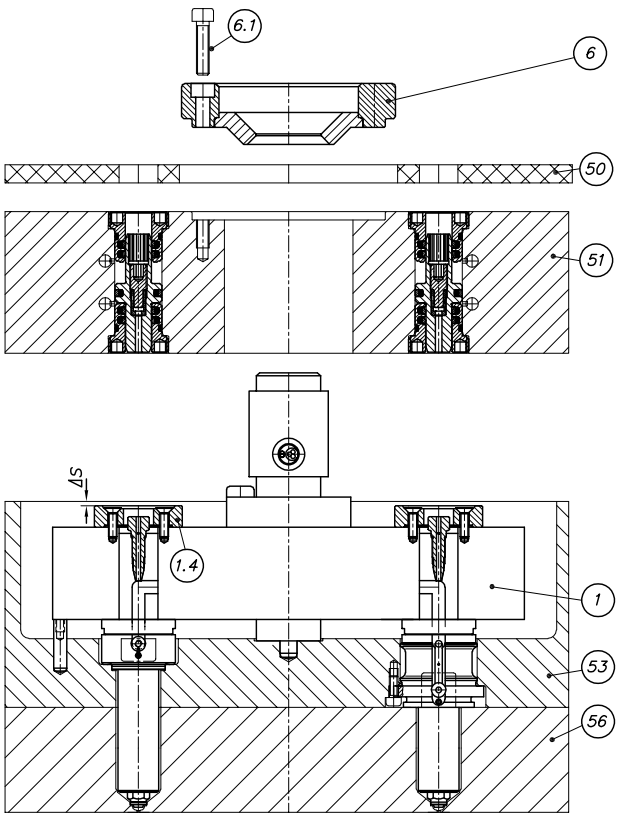

ATTENTION: All warnings and safety instructions listed in Chapter 5.5 must be read and understood before starting installation.

Recommended PPE,
see also Chapter 2.5.1:

1. Check the clearance Δ**S** between the surface of the upper pressure pad (pos. 1.4) and the surface of the nozzle retainer frame plate (pos. 53) and compare it to the value given in the drawing provided by EWIKON.
2. Install the clamping plate (pos. 51) and the insulating plate (pos. 50).
3. Install the locating ring (pos. 6) and fix it with socket head screws (pos. 6.1, ISO 4762 - 12.9). Tighten with matching torque. See Chapter 9, "Tightening torques".
4. Wire the nozzles and the manifold according to the wiring scheme. Please pay attention to the notes in Chapter 5.6, " Electrical connection of hot runner systems".
5. In order to clearly identify the hot runner system attach the type plate included in the delivery prominently to the operator side of the mould.

5.5.7 Drive unit placed on manifold (coupled)

Installation on the manifold

WARNING

Pressurized systems

All hydraulic or pneumatic supply lines must be depressurised during installation.

- Injuries caused by flying parts or “whipping” hoses.
- Injuries to eyes caused by escaping pressurised liquids.

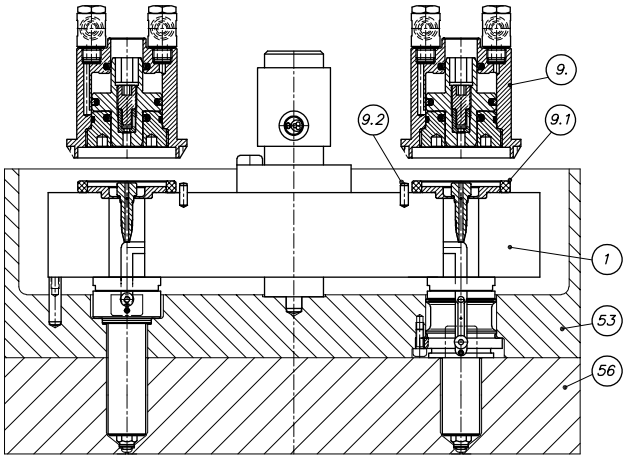

Figure 34: (z342-11) Drive unit placed on manifold (coupled) - installation

ATTENTION: All warnings and safety instructions listed in Chapter 5.5 must be read and understood before starting installation.

Recommended PPE,
see also Chapter 2.5.1:

1. Slide the drive unit (pos. 9) carefully and without tilting over the centring device (pos. 9.1) until it sits flush. Pay attention to the position of the dowel pin (lock against rotation) which is pre-installed in the manifold (pos. 9.2, ISO 8735).

Drive unit placed on manifold (coupled)
Check of clearance ΔS, installation of clamping plate and locating ring

WARNING

Pressurized systems

All hydraulic or pneumatic supply lines must be depressurised during installation.

- Injuries caused by flying parts or “whipping” hoses.
- Injuries to eyes caused by escaping pressurised liquids.

NOTE

All clearances must be checked in cold condition!

In case of deviatons the clearances must be adjusted in an appropriate way (e.g. by machining the nozzle retainer frame plate or the pressure pads of the manifold).

Attention: The adjustment must not have influence on the dimension X of the nozzle!

Checking of clearance when using nozzles for front installation
When nozzles for front installation are installed the contour plate (pos. 56) must be installed before the clearance **ΔS** is checked. Otherwise the measurement is falsified.

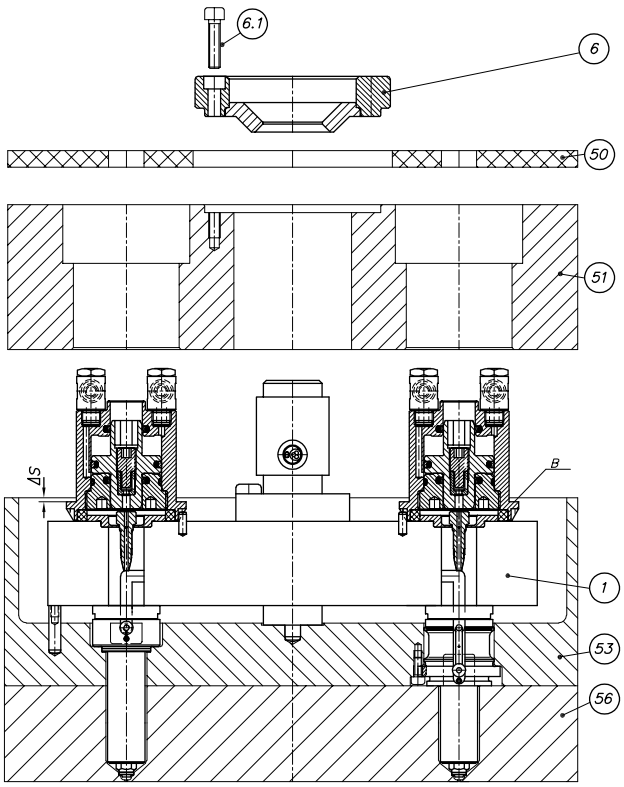

Figure 35: (z342-12) Check of clearance ΔS and subsequent installation steps

ATTENTION: All warnings and safety instructions listed in Chapter 5.5 must be read and understood before starting installation.

Recommended PPE,
see also Chapter 2.5.1:

1. Check the clearance Δ**S** between the surface (B) of the outer collar of the drive unit and the surface of the nozzle retainer frame plate (pos. 53) and compare it to the value given in the drawing provided by EWIKON.
2. Install the clamping plate (pos. 51).
3. Connect the supply lines for compressed air to the drive units and place them in the corresponding cutouts in the clamping plate. For more information regarding connections and accessories see the EWIKON valve gate main catalogue.
4. Install the insulating plate (pos. 50).
5. Install the locating ring (pos. 6) and fix it with socket head screws (pos. 6.1, ISO 4762 - 12.9). Tighten with matching torque. See Chapter 9, "Tightening torques".
6. Wire the nozzles and the manifold according to the wiring scheme. Please pay attention to the notes in Chapter 5.6, " Electrical connection of hot runner systems".
7. In order to clearly identify the hot runner system attach the type plate included in the delivery prominently to the operator side of the mould.

5.5.8 Drive unit placed on manifold (screwed-on) (version 1)

Check of clearance ΔS, installation on the manifold

WARNING

Pressurized systems

All hydraulic or pneumatic supply lines must be depressurised during installation.

- Injuries caused by flying parts or “whipping” hoses.
- Injuries to eyes caused by escaping pressurised liquids.

NOTE

All clearances must be checked in cold condition!

In case of deviatons the clearances must be adjusted in an appropriate way (e.g. by machining the nozzle retainer frame plate or the pressure pads of the manifold).

Attention: The adjustment must not have influence on the dimension X of the nozzle!

Checking of clearance when using nozzles for front installation
When nozzles for front installation are installed the contour plate (pos. 56) must be installed before the clearance **ΔS** is checked. Otherwise the measurement is falsified.

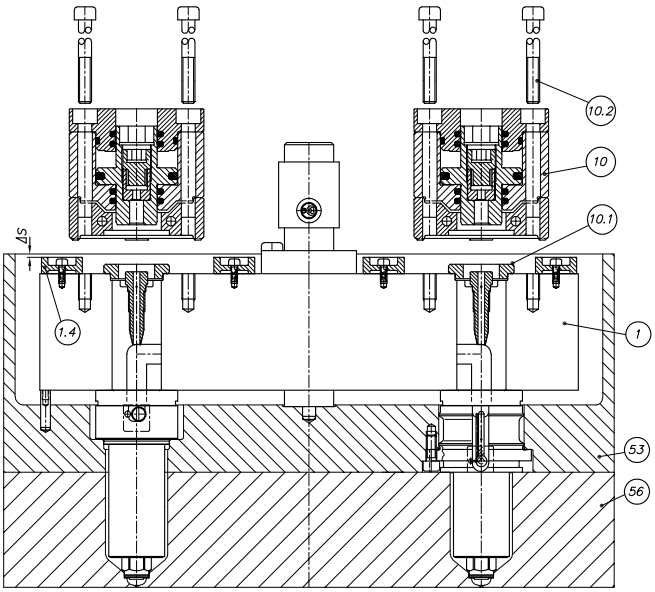

Figure 36: (z342-13) Check of clearance ΔS and installation on the manifold

ATTENTION: All warnings and safety instructions listed in Chapter 5.5 must be read and understood before starting installation.

Recommended PPE,
see also Chapter 2.5.1:

1. Check the clearance Δ**S** between the surface of the upper pressure pad (pos. 1.4) and the surface of the nozzle retainer frame plate (pos. 53) and compare it to the value given in the drawing provided by EWIKON.
2. Slide the drive unit (pos. 10) carefully and without tilting over the centring device (pos. 10.1) until it sits flush on the manifold (pos. 1).
3. Insert the socket head screws (pos. 10.2, ISO 4762 - 12.9, in individual cases also socket head screws with flat head according to DIN 6912 - 10.9 possible) from the back through the bores in the drive unit and screw them into the manifold (pos. 1). Tighten with matching torque. See Chapter 9, "Tightening torques".

Drive unit placed on manifold (screwed-on) (version 1)
Installation of clamping plate and locating ring

WARNING

Pressurized systems

All hydraulic or pneumatic supply lines must be depressurised during installation.

- Injuries caused by flying parts or “whipping” hoses.
- Injuries to eyes caused by escaping pressurised liquids.

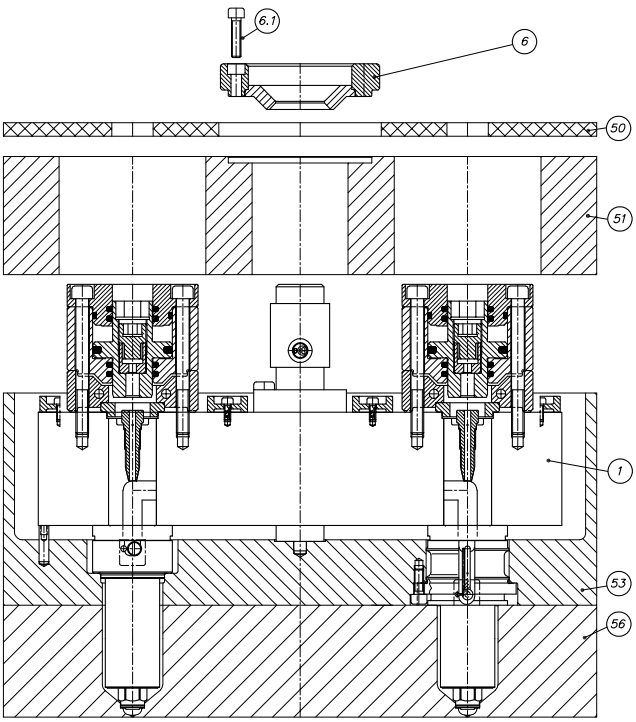

Figure 37: (z342-14) Installation of clamping plate and locating ring

ATTENTION: All warnings and safety instructions listed in Chapter 5.5 must be read and understood before starting installation.

Recommended PPE,
see also Chapter 2.5.1:

1. Connect the supply lines for hydraulic fluid and cooling to the drive unit and align them according to the cutouts in the clamping plate. For more information regarding connections and accessories see the EWIKON valve gate main catalogue.
2. Install the clamping plate (pos. 51). Pay attention that the supply lines are properly placed in the cutouts to avoid damage.
3. Install the insulating plate (pos. 50).
4. Install the locating ring (pos. 6) and fix it with socket head screws (pos. 6.1, ISO 4762 - 12.9). Tighten with matching torque. See Chapter 9, "Tightening torques".
5. Wire the nozzles and the manifold according to the wiring scheme. Please pay attention to the notes in Chapter 5.6, " Electrical connection of hot runner systems".
6. In order to clearly identify the hot runner system attach the type plate included in the delivery prominently to the operator side of the mould.

5.5.9 Drive unit placed on manifold (screwed-on) (version 2)

Check of clearance ΔS, installation on the manifold

WARNING

Pressurized systems

All hydraulic or pneumatic supply lines must be depressurised during installation.

- Injuries caused by flying parts or “whipping” hoses.
- Injuries to eyes caused by escaping pressurised liquids.

NOTE

All clearances must be checked in cold condition!

In case of deviatons the clearances must be adjusted in an appropriate way (e.g. by machining the nozzle retainer frame plate or the pressure pads of the manifold).

Attention: The adjustment must not have influence on the dimension X of the nozzle!

Checking of clearance when using nozzles for front installation
When nozzles for front installation are installed the contour plate (pos. 56) must be installed before the clearance **ΔS** is checked. Otherwise the measurement is falsified.

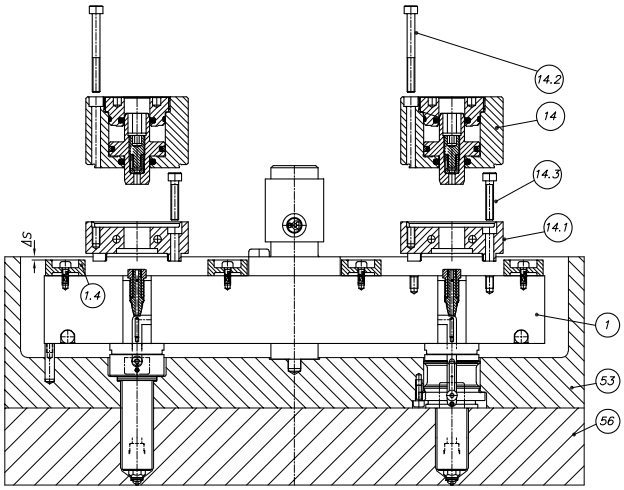

Figure 38: (z342-23) Check of clearance ΔS and installation on the manifold

ATTENTION: All warnings and safety instructions listed in Chapter 5.5 must be read and understood before starting installation.

Recommended PPE,
see also Chapter 2.5.1:

1. Check the clearance Δ**S** between the surface of the upper pressure pad (pos. 1.4) and the surface of the nozzle retainer frame plate (pos. 53) and compare it to the value given in the drawing provided by EWIKON.
2. Place cooling ring (pos. 14.1) flush with socket head screws (pos. 14.3, ISO 4762 - 12.9) on the manifold (Pos. 1) and tighten it with the matching torque. See Chapter 9, "Tightening torques".
3. Insert the socket head screws (Pos. 14.2, ISO 4762 - 12.9) from the back through the bores in the drive unit housing (Pos. 14), screw them onto the cooling ring (Pos. 14.1) and tighten them with the matching torque. See Chapter 9, "Tightening torques".

Drive unit placed on manifold (screwed-on) (version 2)
Installation of clamping plate and locating ring

WARNING

Pressurized systems

All hydraulic or pneumatic supply lines must be depressurised during installation.

- Injuries caused by flying parts or “whipping” hoses.
- Injuries to eyes caused by escaping pressurised liquids.

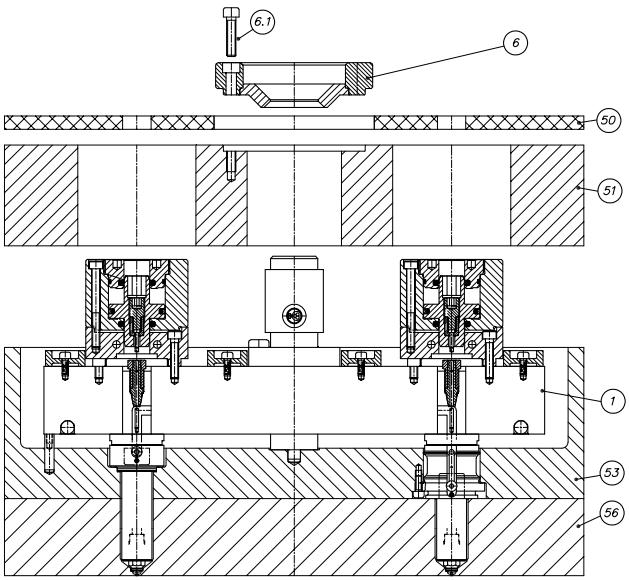

Figure 39: (z342-24) Installation of clamping plate and locating ring

ATTENTION: All warnings and safety instructions listed in Chapter 5.5 must be read and understood before starting installation.

Recommended PPE,
see also Chapter 2.5.1:

1. Connect the supply lines for hydraulic fluid and cooling to the drive unit and align them according to the cutouts in the clamping plate. For more information regarding connections and accessories see the EWIKON valve gate main catalogue.
2. Install the clamping plate (pos. 51). Pay attention that the supply lines are properly placed in the cutouts to avoid damage.
3. Install the insulating plate (pos. 50).
4. Install the locating ring (pos. 6) and fix it with socket head screws (pos. 6.1, ISO 4762 - 12.9). Tighten with matching torque. See Chapter 9, "Tightening torques".
5. Wire the nozzles and the manifold according to the wiring scheme. Please pay attention to the notes in Chapter 5.6, " Electrical connection of hot runner systems".
6. In order to clearly identify the hot runner system attach the type plate included in the delivery prominently to the operator side of the mould.

5.5.10 Installation of valve pin

The installation process described below is valid for the following drive unit versions:

- Drive unit integrated in clamping plate (version 1)
- Drive unit integrated in clamping plate (version 2)
- Drive unit placed on manifold (coupled)
- Drive unit placed on manifold (screwed-on)

The example shows a drive unit which is integrated in the clamping plate.

WARNING

Pressurized systems

All hydraulic or pneumatic supply lines must be depressurised during installation.

- Injuries caused by flying parts or “whipping” hoses.
- Injuries to eyes caused by escaping pressurised liquids.

NOTE

When the hot runner system is not filled the valve pin can be installed in cold condition.

If the hot runner system is filled it must be heated to operating temperature before the valve pin is installed.

Installation of valve pin

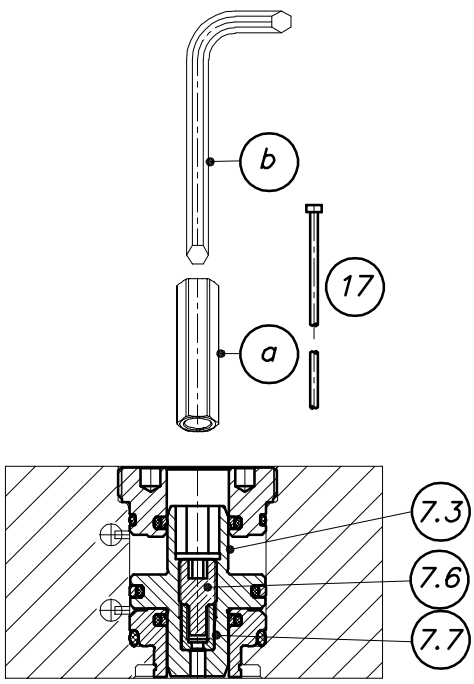

Figure 40: (z342-15) Situation before installation

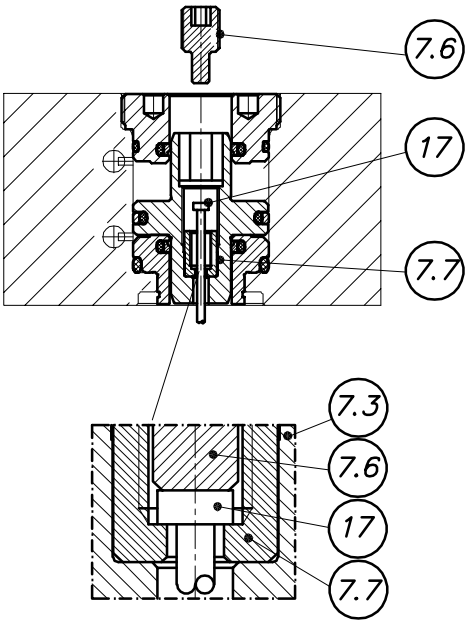

Figure 41: (z342-16) Installation of a valve pin

ATTENTION: All warnings and safety instructions listed in Chapter 5.5 must be read and understood before starting installation.

Recommended PPE,
see also Chapter 2.5.1:

1. Insert tubular hexagon spanner (a) into the hexagonal cutout in the piston (pos. 7.3) and hold it in position by using a wrench to avoid rotation of the piston.
2. Insert the allen key (b) through the tubular hexagon spanner (a) to unscrew and to dismantle the screw (pos. 7.6).
3. Insert the valve pin (pos. 17) carefully and without tilting. Apply axial load only. Tilting or bending caused by lateral load must be avoided. Slowly push the valve pin through the manifold and the valve pin guide in the tip insert of the nozzle until the head of the valve pin sits at the bottom of the valve pin retainer (pos. 7.7).
4. Screw the screw in again by using the allen key and the tubular hexagon spanner. Tighten with matching torque. See Chapter 9.4, "Tightening torques for screws to fix the valve pin in the valve pin retainer".

5.5.11 Electric drive unit with step motor

Check of clearance ΔS, installation of clamping plate and locating ring

NOTE

All clearances must be checked in cold condition!

In case of deviatons the clearances must be adjusted in an appropriate way (e.g. by machining the nozzle retainer frame plate or the pressure pads of the manifold).

Attention: The adjustment must not have influence on the dimension X of the nozzle!

Checking of clearance when using nozzles for front installation
When nozzles for front installation are installed the contour plate (pos. 56) must be installed before the clearance **ΔS** is checked. Otherwise the measurement is falsified.

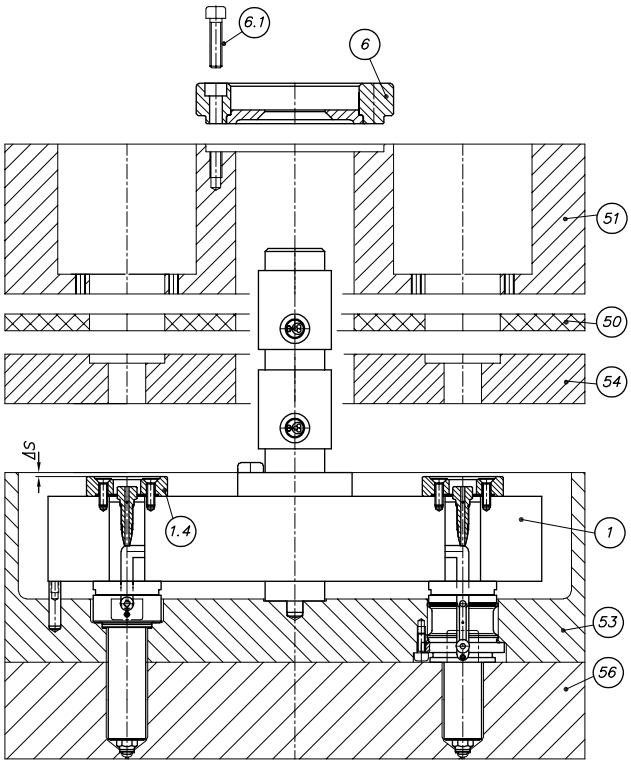

Figure 42: (z342-17) Check of clearance ΔS and subsequent installation steps

ATTENTION: All warnings and safety instructions listed in Chapter 5.5 must be read and understood before starting installation.

Recommended PPE,
see also Chapter 2.5.1:

1. Check the clearance Δ**S** between the surface of the upper pressure pad (pos. 1.4) and the surface of the nozzle retainer frame plate (pos. 53) and compare it to the value given in the drawing provided by EWIKON.
2. Install the intermediate plate (pos. 54), the insulating plate (pos. 50) and the clamping plate (pos. 51).
3. Install the locating ring (pos. 6) and fix it with socket head screws (pos. 6.1, ISO 4762 - 12.9). Tighten with matching torque. See Chapter 9, "Tightening torques".

Electric drive unit (step motor)
Installation of valve pin

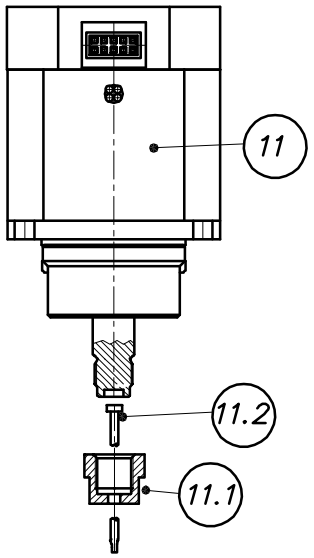

Figure 43: (z342-18) Installation of valve pin

ATTENTION: All warnings and safety instructions listed in Chapter 5.5 must be read and understood before starting installation.

1. Unscrew the valve pin retainer (pos. 11.1) from the drive unit (pos. 11) by using a wrench.
2. Insert the valve pin (pos. 11.2) carefully into the valve pin retainer from behind.
3. Screw the valve pin retainer with valve pin to the drive unit again and tighten it with matching torque. See Chapter 9, "Tightening torques".

Electric drive unit with step motor
Installation in the clamping plate

NOTE

When the hot runner system is not filled the valve pin can be installed in cold condition.

If the hot runner system is filled it must be heated to operating temperature before the valve pin is installed.

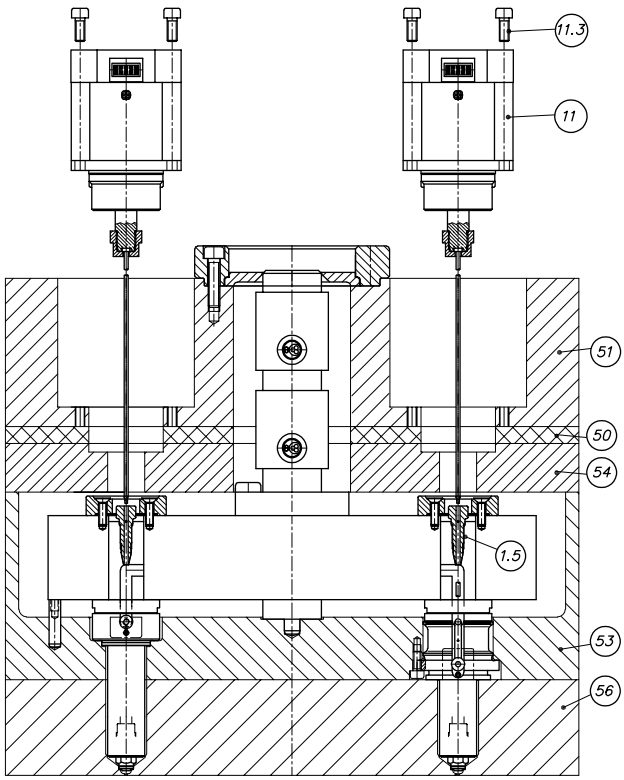

Figure 44: (z342-19) Installation of an electric drive unit with step motor

ATTENTION: All warnings and safety instructions listed in Chapter 5.5 must be read and understood before starting installation.

Recommended PPE,
see also Chapter 2.5.1:

1. Install the drive unit with pre-installed valve pin (pos. 11). Insert the valve pin carefully into the valve pin seal in the manifold. Apply axial load only. Tilting or bending caused by lateral load must be avoided. Slowly push the valve pin through the manifold and the valve pin guide in the tip insert of the nozzle until the drive unit sits flush in the cutout of the clamping plate (pos. 51).
2. Insert the socket head screws (pos. 11.3, ISO 4762 - 12.9) from the back through the bores in the drive unit and screw them into the clamping plate (pos. 51). Tighten with matching torque. See Chapter 9, "Tightening torques".
3. Wire the electric drive units according to the wiring scheme provided by EWIKON.
4. Wire the nozzles and the manifold according to the wiring scheme. Please pay attention to the notes in Chapter 5.6, " Electrical connection of hot runner systems".
5. In order to clearly identify the hot runner system attach the type plate included in the delivery prominently to the operator side of the mould.

5.5.12 Electric drive unit with servo motor

Check of clearance ΔS, installation of clamping plate and locating ring

NOTE

All clearances must be checked in cold condition!

In case of deviatons the clearances must be adjusted in an appropriate way (e.g. by machining the nozzle retainer frame plate or the pressure pads of the manifold).

Attention: The adjustment must not have influence on the dimension X of the nozzle!

Checking of clearance when using nozzles for front installation
When nozzles for front installation are installed the contour plate (pos. 56) must be installed before the clearance **ΔS** is checked. Otherwise the measurement is falsified.

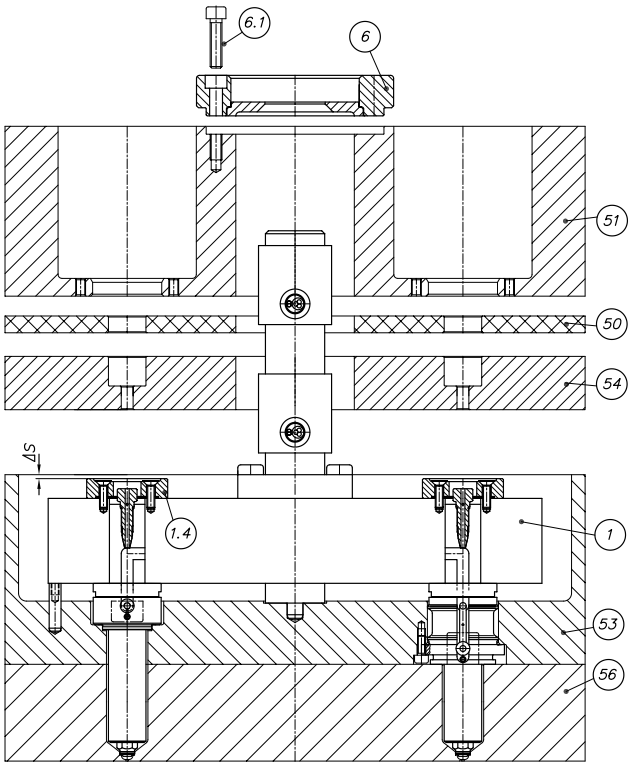

Figure 45: (z342-26) Check of clearance ΔS and subsequent installation steps

ATTENTION: All warnings and safety instructions listed in Chapter 5.5 must be read and understood before starting installation.

Recommended PPE,
see also Chapter 2.5.1:

1. Check the clearance Δ**S** between the surface of the upper pressure pad (pos. 1.4) and the surface of the nozzle retainer frame plate (pos. 53) and compare it to the value given in the drawing provided by EWIKON.
2. Install the intermediate plate (pos. 54), the insulating plate (pos. 50) and the clamping plate (pos. 51).
3. Install the locating ring (pos. 6) and fix it with socket head screws (pos. 6.1, ISO 4762 - 12.9). Tighten with matching torque. See Chapter 9, "Tightening torques".

Electric drive unit (servo motor)
Installation of valve pin

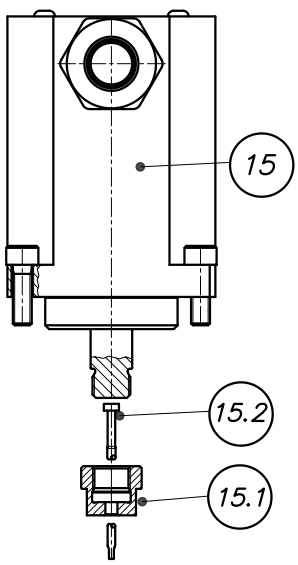

Figure 46: (z342-27) Installation of valve pin

ATTENTION: All warnings and safety instructions listed in Chapter 5.5 must be read and understood before starting installation.

1. Unscrew the valve pin retainer (pos. 15.1) from the drive unit (pos. 15) by using a wrench.
2. Insert the valve pin (pos. 15.2) carefully into the valve pin retainer from behind.
3. Screw the valve pin retainer with valve pin to the drive unit again and tighten it with matching torque. See Chapter 9, "Tightening torques".

Electric drive unit with servo motor
Installation in the clamping plate

NOTE

When the hot runner system is not filled the valve pin can be installed in cold condition.

If the hot runner system is filled it must be heated to operating temperature before the valve pin is installed.

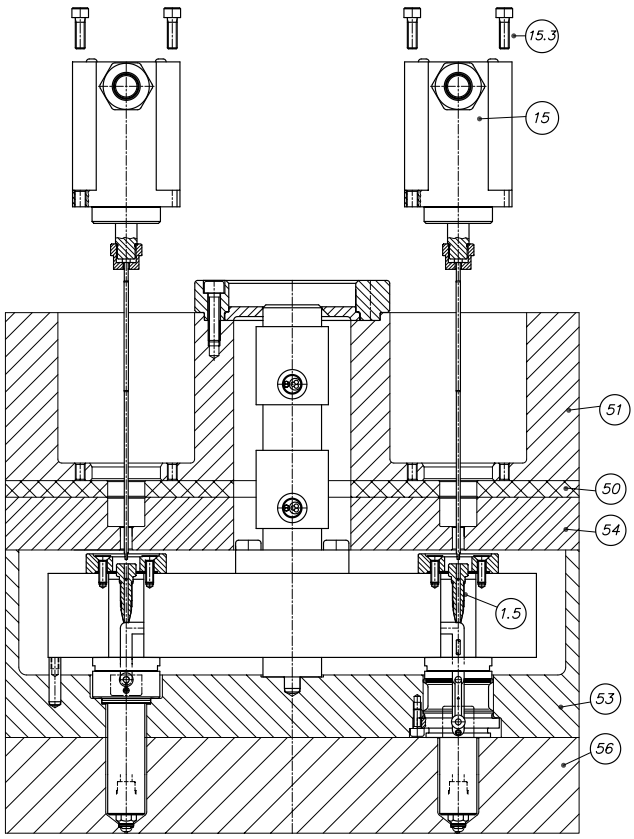

Figure 47: (z342-28) Installation of an electric drive unit with servo motor

ATTENTION: All warnings and safety instructions listed in Chapter 5.5 must be read and understood before starting installation.

Recommended PPE,
see also Chapter 2.5.1:

1. Install the drive unit with pre-installed valve pin (pos. 15). Insert the valve pin carefully into the valve pin seal in the manifold (pos. 1.5). Apply axial load only. Tilting or bending caused by lateral load must be avoided. Slowly push the valve pin through the manifold and the valve pin guide in the tip insert of the nozzle until the drive unit sits flush in the cutout of the clamping plate (pos. 51).
2. Insert the socket head screws (pos. 15.3, ISO 4762 - 12.9) from the back through the bores in the drive unit and screw them into the clamping plate. Tighten with matching torque. See Chapter 9, "Tightening torques".
3. Wire the electric drive units according to the wiring scheme provided by EWIKON.
4. Wire the nozzles and the manifold according to the wiring scheme. Please pay attention to the notes in Chapter 5.6, " Electrical connection of hot runner systems".
5. In order to clearly identify the hot runner system attach the type plate included in the delivery prominently to the operator side of the mould.

5.5.13 Installation of synchronous plate valve gate systems for HPS III-S / pro SHOT nozzles for standard and front installation

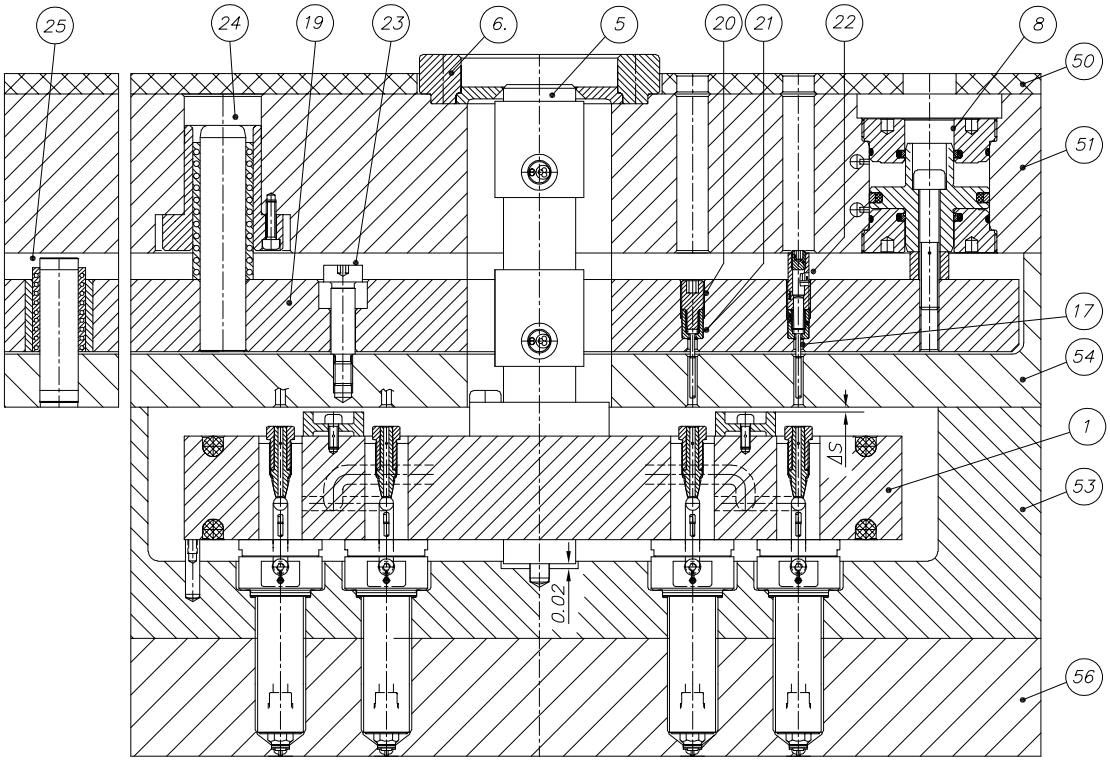

Figure 48: (z381-02) General layout of a synchronous plate valve gate system for HPS III-S / pro SHOT nozzles for standard and front installation

Pos. 1	Manifold
Pos. 5	Sprue bush
Pos. 6	Locating ring
Pos. 8	Drive unit integrated in clamping plate (version 2)
Pos. 17	Valve pin
Pos. 19	Synchronous plate
Pos. 20	Screw for valve pin holder
Pos. 21	Valve pin holder
Pos. 22	Overload safety device for valve pin
Pos. 23	Shoulder screw
Pos. 24	Guiding system (version 1)
Pos. 25	Guiding system (version 2) (for restricted installation space)
Pos. 50	Insulating plate
Pos. 51	Clamping plate
Pos. 53	Nozzle retainer frame plate
Pos. 54	Intermediate plate
Pos. 56	Contour plate

5.5.14 Drive unit integrated in clamping plate (version 2) for synchronous plate systems Installation in the clamping plate

WARNING

Pressurized systems

All hydraulic or pneumatic supply lines must be depressurised during installation.

- Injuries caused by flying parts or “whipping” hoses.
- Injuries to eyes caused by escaping pressurised liquids.

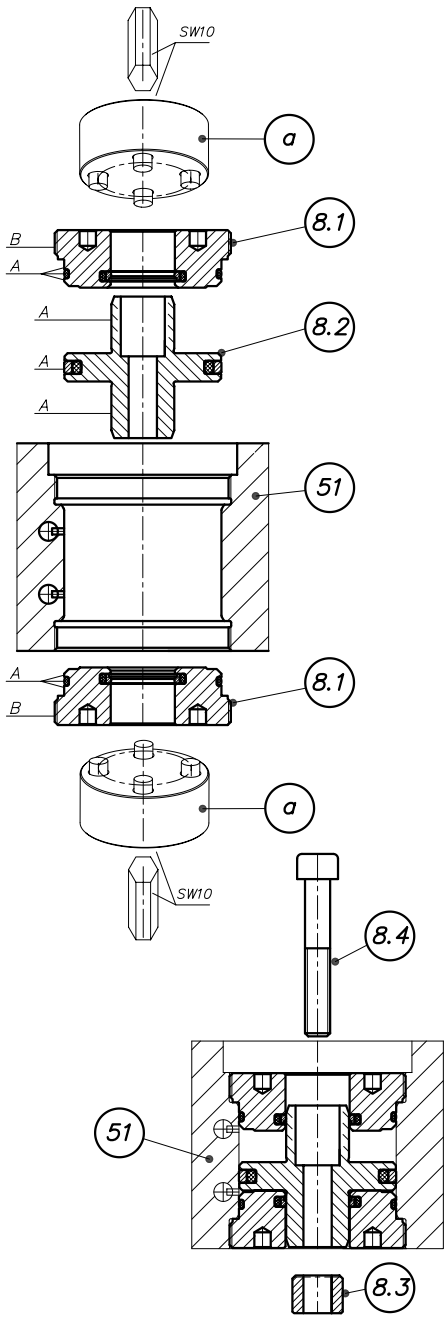

Figure 49: (z381-03) Montage eines integrierten Antriebs (Variante 2) für Hubplattensysteme

ATTENTION: All warnings and safety instructions listed in Chapter 5.5 must be read and understood before starting installation.

Recommended PPE,
see also Chapter 2.5.1:

1. Apply a thin coat of high performance grease (see Chapter 5.3.1, "Tools and operating materials") to all surfaces marked with (A).
2. Apply high temperature installation paste (see Chapter 5.3.1, "Tools and operating materials") to all surfaces marked with (B).
3. Insert and screw-in the screw-in housing cover (pos. 8.1) into the clamping plate (pos. 51) from below by using the installation wrench (pos. a). Tighten with matching torque. See Chapter 9, "Tightening torques".
4. Slide the screw-in housing cover (pos. 8.1) on the piston (pos. 8.2) from above. Insert both components carefully and without tilting so that the piston slides into the already fitted screw-in housing cover (pos. 8.1). Be careful not to damage the sealings.
5. Screw the screw-in housing cover (pos. 8.1) into the clamping plate (pos. 51) by using the installation wrench (pos. a) and tighten with matching torque. See Chapter 9, "Tightening torques".

NOTE

The enclosed spacer bushing (Pos. 8.3) and screw (Pos. 8.4) are installed in a subsequent installation step.

5.5.15 Installation of the synchronous plate (version 1)

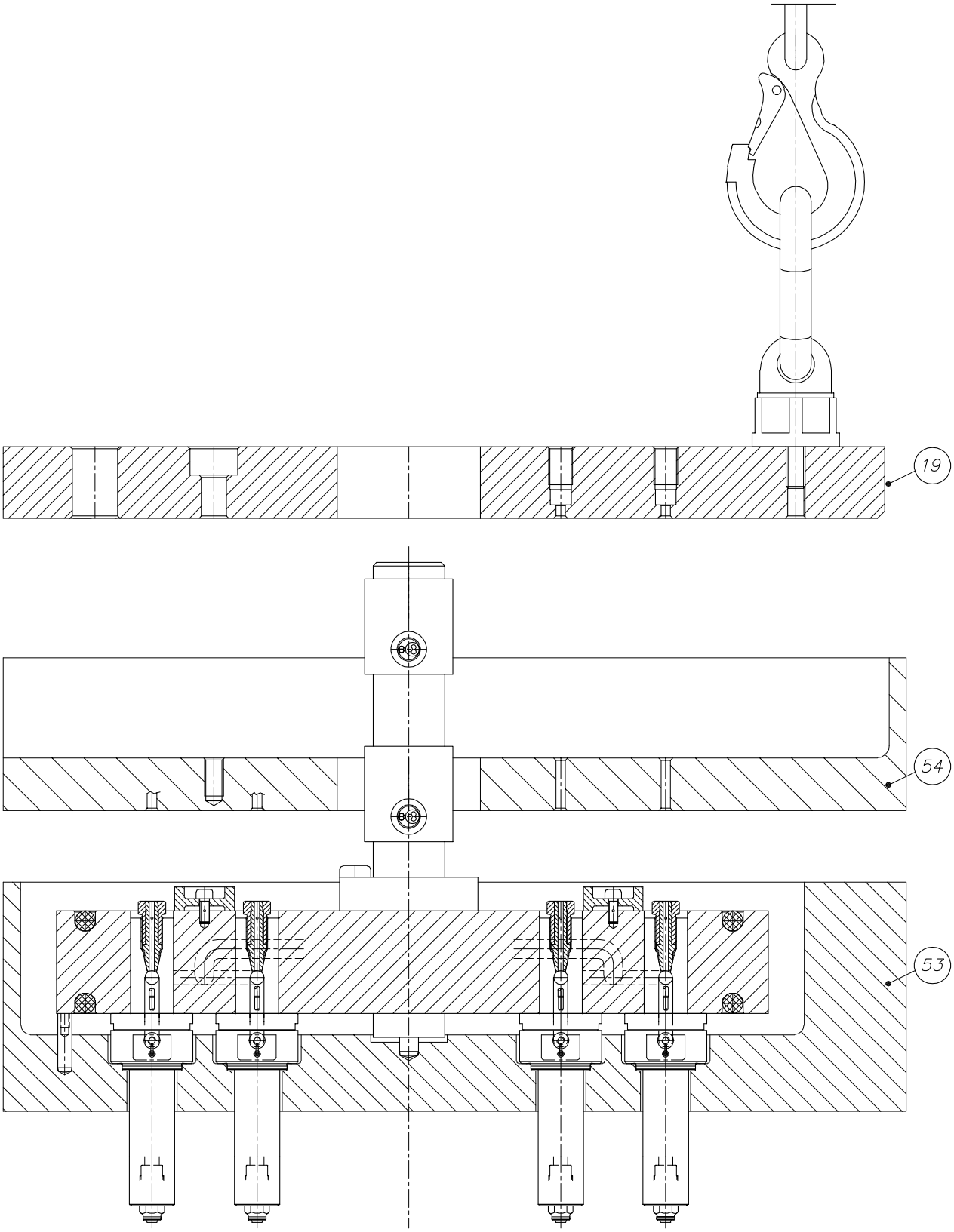

Figure 50: (z381-05) Installation of the synchronous plate (version 1)

Installation of the synchronous plate (version 1)

WARNING

Suspended loads

Death and severe crushing of body or extremities.

- Keep clear of and do not pass under suspended loads.
- Keep clear of suspended loads while they are being transported.
- Do not touch lifting devices and lifting accessories while lifting the load.
- Only lift, transport and set down loads, if you have received appropriate training.
- Only use suitable and undamaged lifting devices and lifting accessories which are checked regularly.
- Do not exceed the maximum load limit of lifting accessories.

ATTENTION: All warnings and safety instructions listed in Chapter 5.5 must be read and understood before starting installation.

Recommended PPE,
see also Chapter 2.5.1:

1. Bolt the intermediate plate (pos. 54) to the nozzle retainer frame plate (pos. 53).
2. Place the synchronous plate (pos. 19) in the intermediate plate.

5.5.16 Installation of the guiding system (version 1) for synchronous plate systems

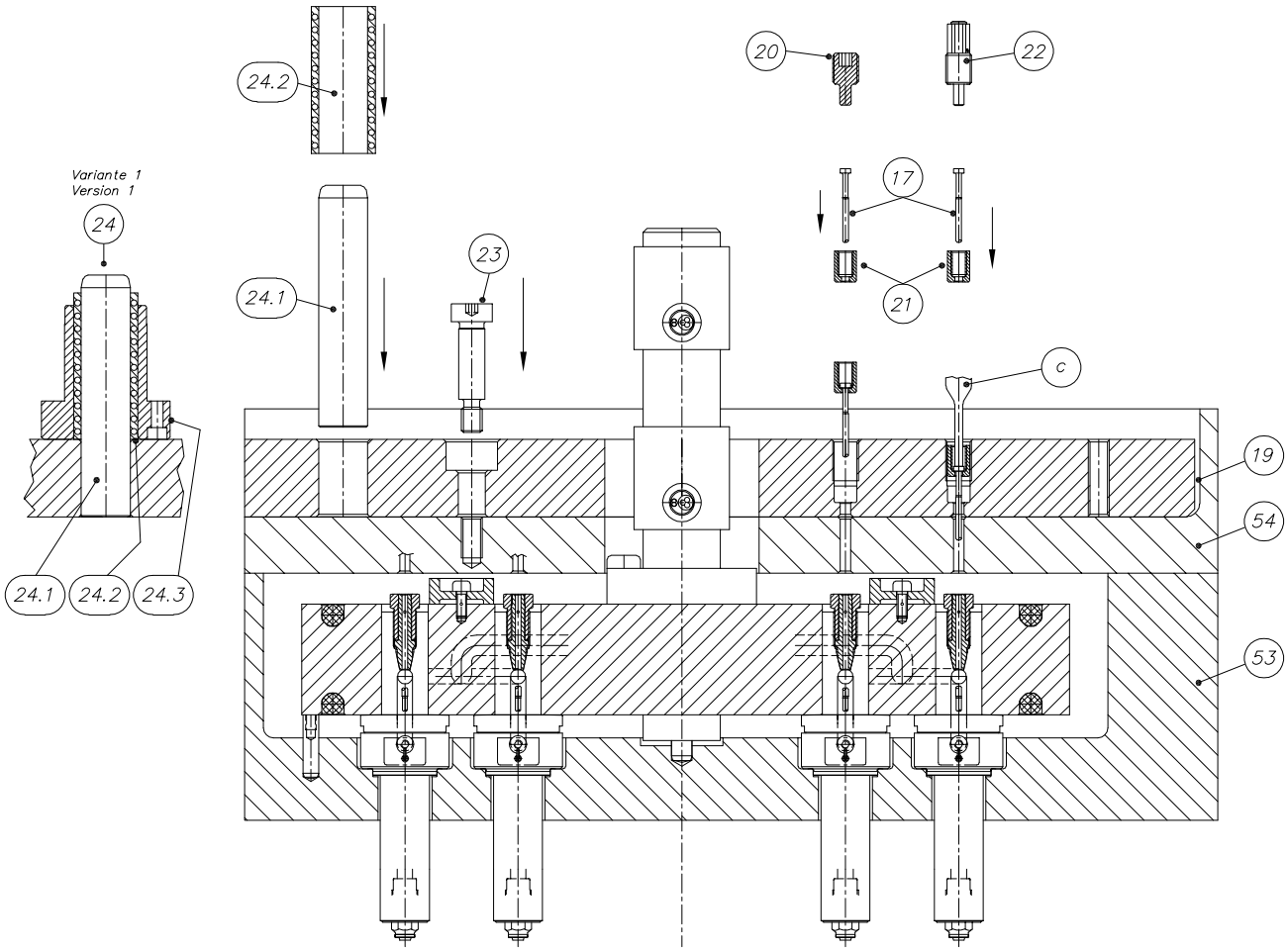

Figure 51: (z381-06) : Installation of the guiding system (version 1)

Installation of the guiding system (version 1) for synchronous plate systems

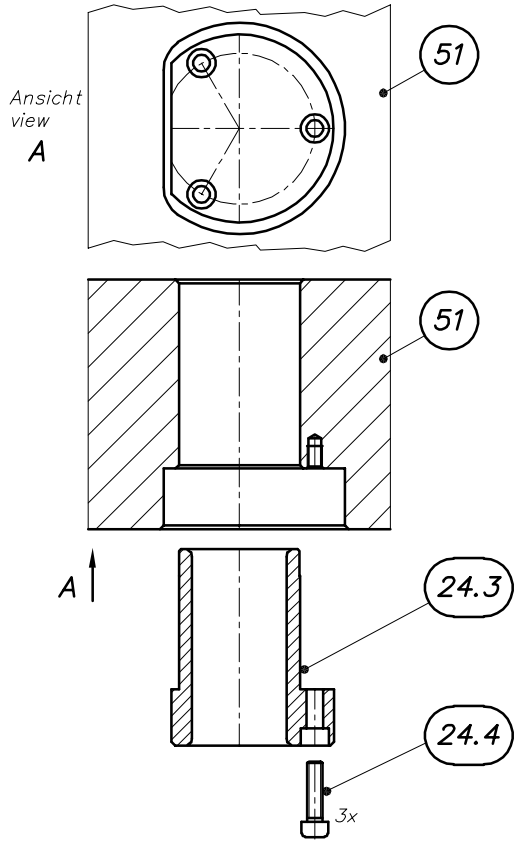

Figure 52: (z381-04) Installation of the guiding system (version 1)

ATTENTION: All warnings and safety instructions listed in Chapter 5.5 must be read and understood before starting installation.

Recommended PPE,
see also Chapter 2.5.1:

1. Screw the shoulder screw (pos. 23) into the intermediate plate (pos. 54) as far as it will go in order to locate the synchronous plate.
2. **Note:** Guide pillar (pos. 24.1) and ball cage (pos. 24.2) are delivered pre-assembled. The guide bushing with flange (pos. 24.3) which has to be installed in the clamping plate (pos. 51) is slipped over the ball cage. Disassemble the three parts before installation.
3. Drive the guide pillar (pos. 24.1) into the synchronous plate (pos. 19) until it sits flush with the bottom edge of the synchronous plate. Apply a thin coat of high performance grease (see Chapter 5.3.1, "Tools and operating materials") to the ball cage. Slide the ball cage over the guide pillar until it hits the surface of the synchronous plate.
4. Screw the guide bushing with flange (pos. 24.3) with socket head screws (pos. 24.4) into the clamping plate (pos. 51) and tighten with matching torque. See Chapter 9, "Tightening torques". No lubrication is required.

5.5.17 Installation of the synchronous plate and guiding system (version 2)

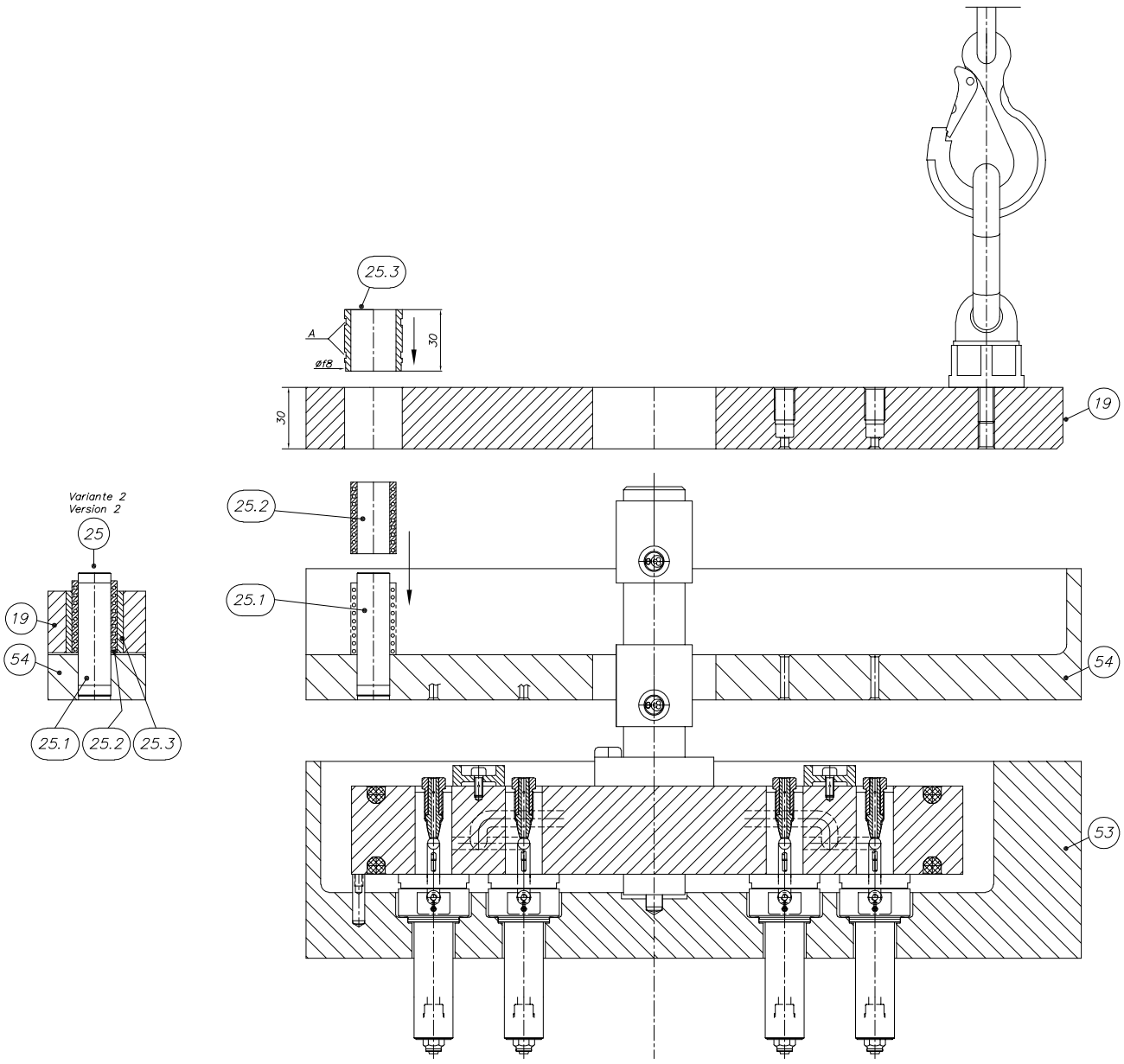

Figure 53: (z381-09) Installation of the synchronous plate and guiding system (version 2)

Installation of the synchronous plate and guiding system (version 2)

WARNING

Suspended loads

Death and severe crushing of body or extremities.

- Keep clear of and do not pass under suspended loads.
- Keep clear of suspended loads while they are being transported.
- Do not touch lifting devices and lifting accessories while lifting the load.
- Only lift, transport and set down loads, if you have received appropriate training.
- Only use suitable and undamaged lifting devices and lifting accessories which are checked regularly.
- Do not exceed the maximum load limit of lifting accessories.

ATTENTION: All warnings and safety instructions listed in Chapter 5.5 must be read and understood before starting installation.

Recommended PPE,
see also Chapter 2.5.1:

1. Drive the guide pillar (pos. 25.1) into the intermediate plate (pos. 54) as far as it will go.
2. Apply a thin coat of high performance grease (Chapter 5.3.1, "Tools and operating materials") to the ball cage (pos. 25.2). Slide the ball cage over the guide pillar (pos. 25.1) until it hits the surface of the intermediate plate (pos. 54).
3. **Note:** Guide bushings (pos. 25.3) and synchronous plate (pos. 19) are delivered pre-assembled.
4. *If the guide bushings (pos. 25.3) are not pre-assembled in the synchronous plate (pos. 19) proceed as follows: Apply a thin coat of Loctite 648 (Chapter 5.3.1, "Tools and operating materials") to the adhesive grooves in the guide bushing (pos. 25.3) and insert it into the synchronous plate (pos. 19) until it sits flush. The chamfer f8 at the guide bushing (Pos. 25.3) is used as centring aid for the installation. After 15 minutes please check if the guide bushing is fixed.*
   ***Attention!** Since deformation can occur the guide bushing must not be press fitted!*
5. Place the synchronous plate (pos. 19) in the intermediate plate (pos. 54).

5.5.18 Installation of the valve pin (version 1 and 2)

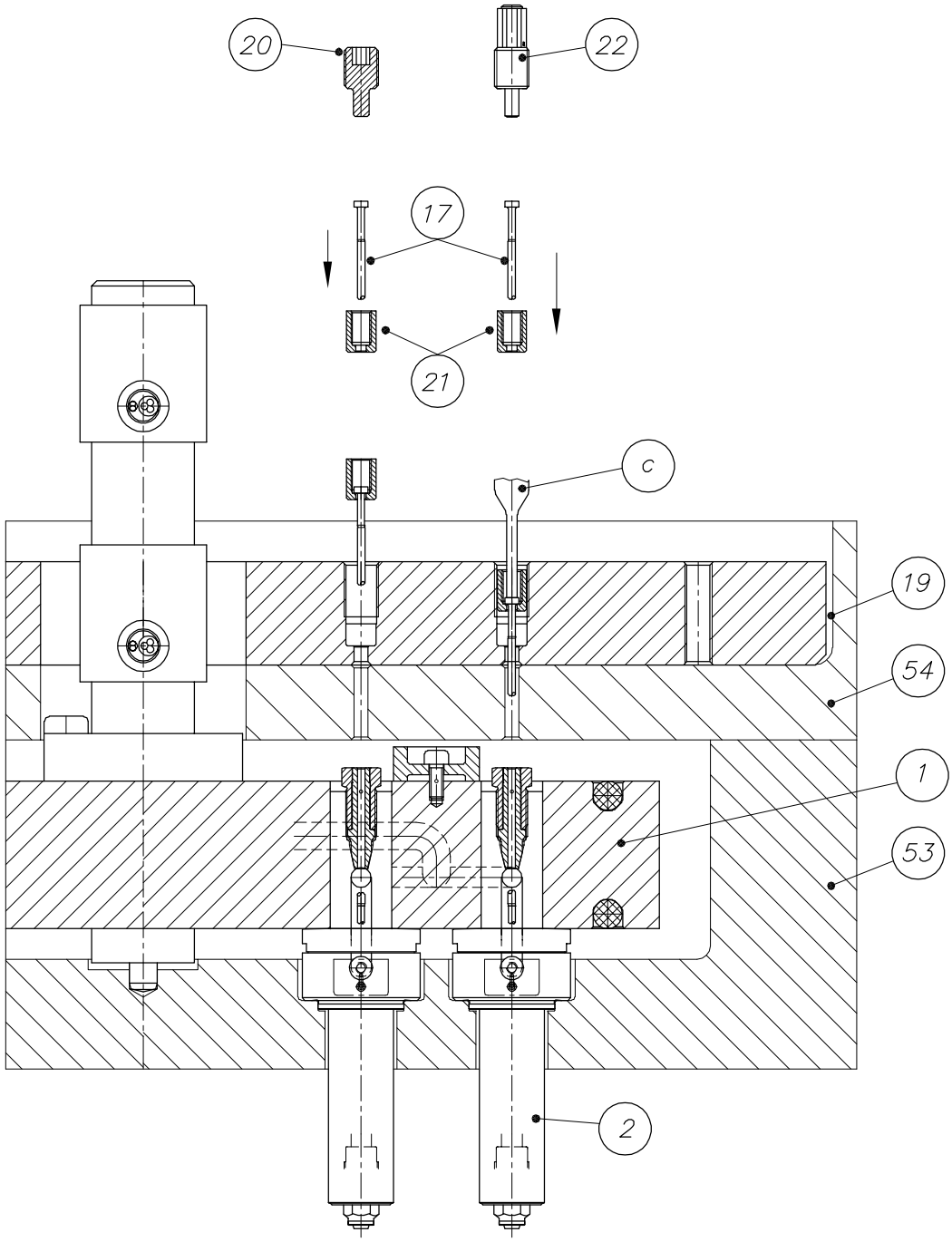

Figure 54: (z381-10) Installation of the valve pin

Installation of the valve pin (version 1 and 2)

NOTE

When the hot runner system is not filled the valve pin can be installed in cold condition.

If the hot runner system is filled it must be heated to operating temperature before the valve pin is installed.

ATTENTION: All warnings and safety instructions listed in Chapter 5.5 must be read and understood before starting installation.

Recommended PPE,
see also Chapter 2.5.1:

1. Insert the valve pin (pos. 17) carefully into the valve pin retainer (pos. 21) from behind.
2. Push the valve pin retainer with valve pin carefully and without tilting through the synchronous plate (pos. 19), the manifold (pos. 1) and the nozzle (pos. 2). Apply axial load only. Tilting or bending caused by lateral load must be avoided. Slowly push the valve pin through the manifold and the valve pin guide in the tip insert of the nozzle until the valve pin retainer sits at the bottom of the recess in the synchronous plate.
3. For doing this a mandrel (pos. c) can be used. Its diameter must be smaller than the tapping drill hole of the thread in the valve pin retainer. Otherwise the thread can be damaged.
4. Screw the screw (pos. 20) respectively the overload safety device (pos. 22) into the valve pin retainer and tighten with matching torque (see Chapter 9.4, "Tightening torques for screws to fix the valve pin in the valve pin retainer").

5.5.19 Adjusting the valve pin length by adapting the spacer bushings (version 1 and 2)

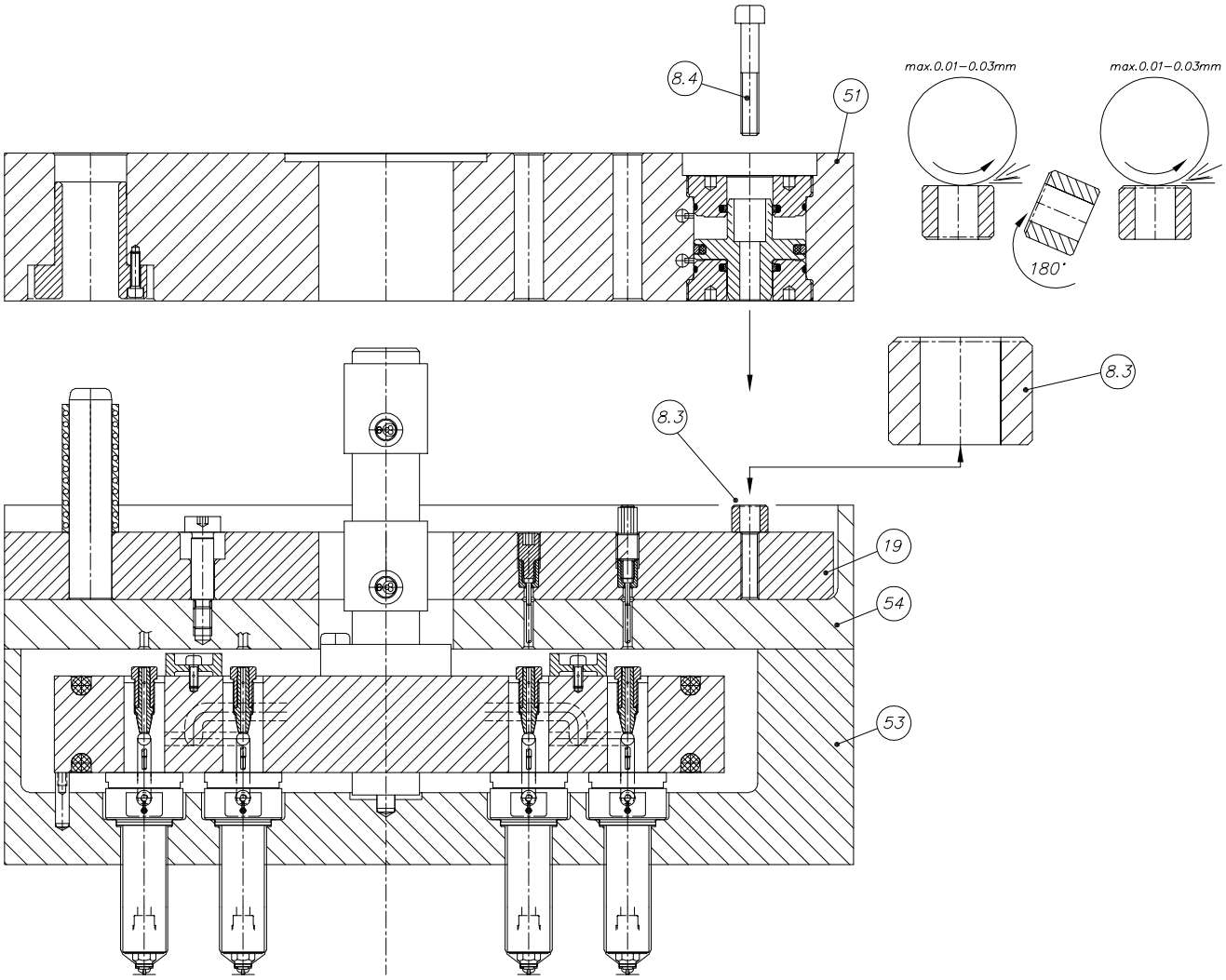

Figure 55: (z381-07) Adapting the spacer bushing

Adjusting the valve pin length by adapting the spacer bushings (version 1 and 2)

WARNING

Suspended loads

Death and severe crushing of body or extremities.

- Keep clear of and do not pass under suspended loads.
- Keep clear of suspended loads while they are being transported.
- Do not touch lifting devices and lifting accessories while lifting the load.
- Only lift, transport and set down loads, if you have received appropriate training.
- Only use suitable and undamaged lifting devices and lifting accessories which are checked regularly.
- Do not exceed the maximum load limit of lifting accessories.

WARNING

Pressurized systems

All hydraulic or pneumatic supply lines must be depressurised during installation.

- Injuries caused by flying parts or “whipping” hoses.
- Injuries to eyes caused by escaping pressurised liquids.

ATTENTION: All warnings and safety instructions listed in Chapter 5.5 must be read and understood before starting installation.

Recommended PPE,
see also Chapter 2.5.1:

1. Grind both end faces of the spacer bushings (pos. 8.3) neatly (max. 0.01 - 0.03 mm per end face).
2. It is recommended to grind all spacer bushings at once.
3. Clean the spacer bushings.
4. Place the spacer bushing (pos. 8.3) on the synchronous plate centrical over the thread for the socket head screw (pos. 8.4) which connects drive unit and synchronous plate.
5. Install the clamping plate (pos. 51) carefully on the intermediate plate (pos. 54).
6. Insert the socket head screw (pos. 8.4) into the drive unit, push it carefully through the spacer bushing (pos. 8.3) and screw it into the clamping plate (Pos. 19). Tighten with matching torque (see Chapter 9.1, "Tightening torques for socket head screws").

5.5.20 Dimensional check for adjusting the valve pin length (for version 1 and 2)

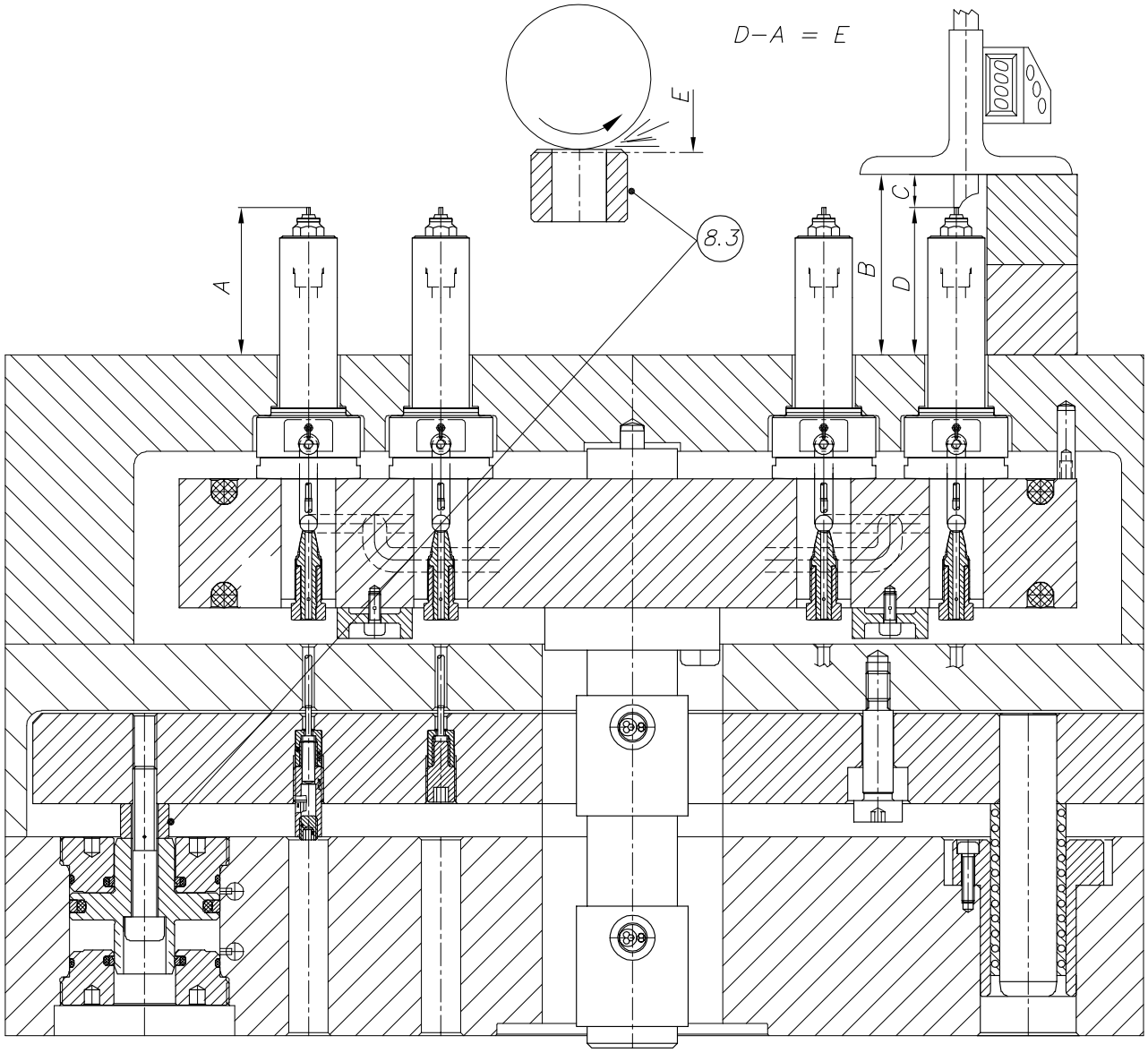

Figure 56: (z381-08) Control dimensions for spacer bushing and valve pin length

Dimensional check for adjusting the valve pin length (for version 1 and 2)

WARNING

Suspended loads

Death and severe crushing of body or extremities.

- Keep clear of and do not pass under suspended loads.
- Keep clear of suspended loads while they are being transported.
- Do not touch lifting devices and lifting accessories while lifting the load.
- Only lift, transport and set down loads, if you have received appropriate training.
- Only use suitable and undamaged lifting devices and lifting accessories which are checked regularly.
- Do not exceed the maximum load limit of lifting accessories.

WARNING

Pressurized systems

All hydraulic or pneumatic supply lines must be depressurised during installation.

- Injuries caused by flying parts or “whipping” hoses.
- Injuries to eyes caused by escaping pressurised liquids.

NOTE

Dim. A: Protrusion of the valve pin in cold condition. This dimension is contained in the drawing provided by EWIKON.

Gauge blocks: Gauge blocks are blocks which are manufactured with highest precision from stainless steel, glass, hard metal or ceramic. They are used for checking and calibration of measuring equipment, tools or machine parts.

ATTENTION: All warnings and safety instructions listed in Chapter 5.5 must be read and understood before starting installation.

Recommended PPE,
see also Chapter 2.5.1:

1. Turn the system by 180°.
2. Connect the supply lines for compressed air / hydraulic fluid to the system and move the valve pins into forward position (valve pin closed). Hold the supply pressure.
3. Use gauge blocks (accuracy class 1) to built the protrusion of the valve pin A (see Note) + min. approx. 10 mm.
4. Determine dimensions B and C. We have: B - C = D
5. Move the valve pins into back position (valve pin open) again and depressurize the system.
6. Turn the system by 180° and disassemble the spacer bushings again.
7. We have: D - A = E
8. Grind down the difference E at the end face of the spacer bushings (pos. 8.3) which features the larger chamfer.
9. Install the finished spacer bushings and assemble the system again as described in Chapter 5.5.19, "Adjusting the valve pin length by adapting the spacer bushings (version 1 and 2)"“.
10. Turn the system again by 180°, connect the supply lines, apply pressure, repeat the measuring process (steps 2 - 7) and check the results until dimension A is reached.

5.5.21 Installation of a hot half with HPS III valve gate nozzles

Preliminary measures

WARNING

Suspended loads

Death and severe crushing of body or extremities.

- Keep clear of and do not pass under suspended loads.
- Keep clear of suspended loads while they are being transported.
- Do not touch lifting devices and lifting accessories while lifting the load.
- Only lift, transport and set down loads, if you have received appropriate training.
- Only use suitable and undamaged lifting devices and lifting accessories which are checked regularly.
- Do not exceed the maximum load limit of lifting accessories.

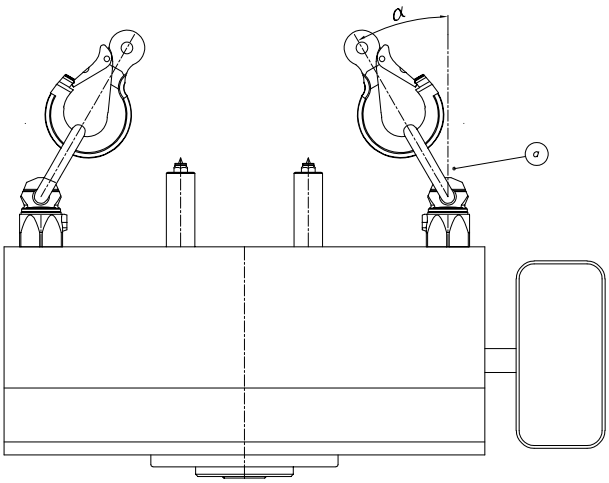

Figure 57: (z351-03) Preliminary measures

ATTENTION: All warnings and safety instructions listed in Chapter 5.5 must be read and understood before starting installation.

Recommended PPE,
see also Chapter 2.5.1:

1. Lift the hot half carefully out of the transport crate. Due to the better force application point EWIKON recommends to use attachment swivels only (pos. a, see Chapter 5.1, "Transport" and Chapter 5.3.1, "Tools and operating materials").
2. Check the hot half for possible transport damage (visual check).

Installation of a hot half with HPS III valve gate nozzles

CAUTION

Respect operating temperatures

Each hot runner system is individually designed for the material to be processed. Therefore, the specified operating temperatures must be observed. The temperature difference ΔT between hot runner temperature T_{HK} (processing temperature) and mould temperature T_{WZ}, must be strictly adhered to.

- Non-observance may cause an escape of melt inside the mould (ΔT too low) or damage to components (ΔT too large).

WARNING

Pressurized systems

All hydraulic or pneumatic supply lines must be depressurised during installation.

- Injuries caused by flying parts or “whipping” hoses.
- Injuries to eyes caused by escaping pressurised liquids.

NOTE

To avoid damage to the sealing collars of the tip inserts when installing the contour plate the guide elements should always be longer than the longest hot runner nozzle in the mould.

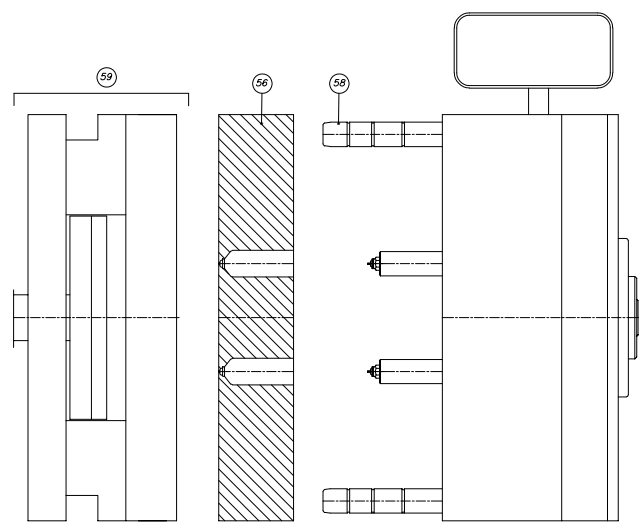

Figure 58: (z351-09) Installation

ATTENTION: All warnings and safety instructions listed in Chapter 5.5 must be read and understood before starting installation.

Recommended PPE,
see also Chapter 2.5.1:

1. Check reference dimensions and tolerances of the hot half as well as of the contour plate (machined by customer) again and compare them to the values given in the installation drawing provided by EWIKON. For required reference dimensions also see Chapter 5.4, "Checks before installation".
2. Apply a thin coat of high performance grease (see Chapter 5.3.1, "Tools and operating materials") to the guide elements (pos. 58). Install the contour plate (pos. 56) by carefully sliding it over the guide elements. The valve pins must be in back position (open). If the hot half features open cable channels for example when nozzles for front installation are installed check the position of the connection cables of the nozzles again to prevent squeezing when the contour plate is installed.
3. Check if plug assignment is in accordance with the wiring plan provided by EWIKON.
4. Complete the mould with the moving mould half (pos. 59) and mount it on the machine.
5. Connect the supply lines for compressed air / hydraulic fluid / cooling with the corresponding connections at the hot half. Check all cooling circuits for free flow.
6. Connect the hot half to the hot runner controller and heat it up in diagnosis mode. If the controller does not feature a diagnosis function heat up each zone separately and check if the thermocouple and power connections are allocated correctly.

5.6 Electrical connection of hot runner systems

5.6.1 Safety instructions

DANGER

Installation with activated voltage supply

Risk of death by electric shock and severe injuries caused by live components.

- During all installation steps that do not require heating, the hot runner components and the injection mould must be disconnected from the power source.

DANGER

Insufficient protective conductor connection to the injection moulding machine

Risk of deadly electric shock or severe injuries due to live components.

- The operator must ensure that during startup of the system all electrical system components have been wired to to the protective conductor system or are protected by equivalent safety measures before applying electric voltage.
- When applying electric voltage to systems or to system components beyond specified normal operation, sufficient ground earth connection or equivalent safety measures must be ensured for each component.

WARNING

Check of live components before installation

The electrical equipment of the hot runner system should be checked, especially those areas which will no longer be accessible after installation. Physical injuries such as an electric shock can be prevented that way.

Please check

- if cables are kinked or squeezed.
- if cable insulations are undamaged.

NOTE

Mechanical stress of cable ends

The cable ends must not be subject to tensile stress.

Protect the cable ends

When wiring the system make sure that the thermo and power lines do not protrude from the outer edges of the mould and are protected against damage. The distances between hot runner and cables inside the mould have to be dimensioned in such a way that there is no damage to the components or insulation caused by excessive heat.

Secure the connection cables

All connecting cables have to secured in such a way that they do not get pinched when they are installed in the mould (use cable binders and/or covering plates for the recesses).

Adhere to bending radiuses

The bending radiuses of the coil heater and the thermocouple have to be adhered to. The minimum bending radius is 15 mm. The connection can only be bended once

General instructions for wiring

- Place the cables in such a way that there is no direct contact with hot surfaces and that the expected temperature is below the maximum allowable temperature for the wire insulation.
- Place the cables in such a way that they can not get pinched when the hot runner system is installed.
- When placing the cables keep clear of sharp edges.

5.6.2 General information

The installation and wiring of hot runner components must be carried out in compliance with DIN EN 60204-1 and recognized engineering standards. All work must be performed exclusively by qualified and authorized personnel.

Heaters designed for a rated voltage of 230 V AC are used. It must be ensured that the applied voltage matches this specification. The heaters are connected via the plug according to the configuration specified in the wiring diagram supplied with

the respective hot runner system. The following illustrations provide an overview of the cable assignments for HPS III nozzles and manifolds.

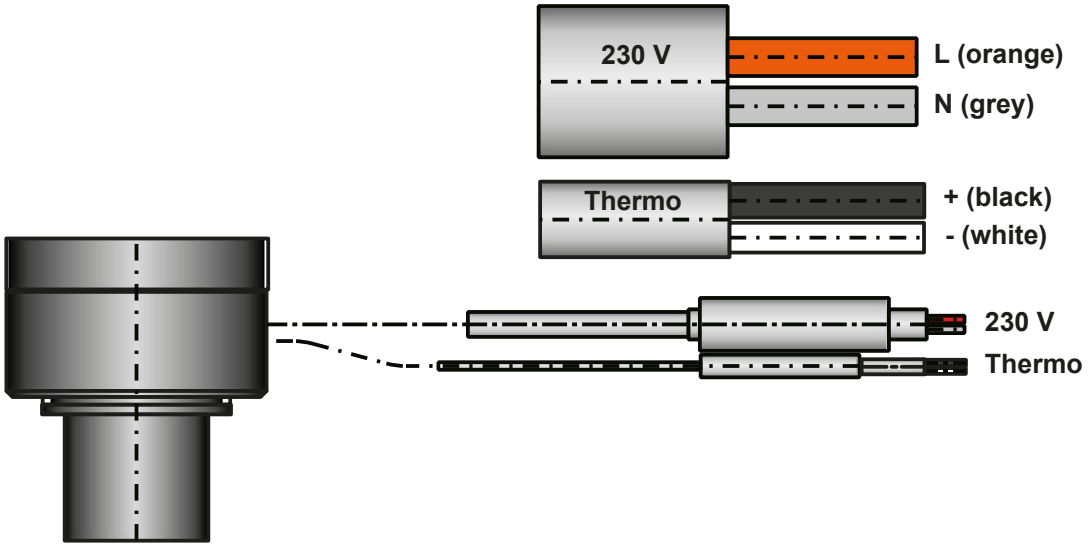

Figure 59: (z342-02) Cable assignment of HPS III-S / pro SHOT nozzles (one control zone)

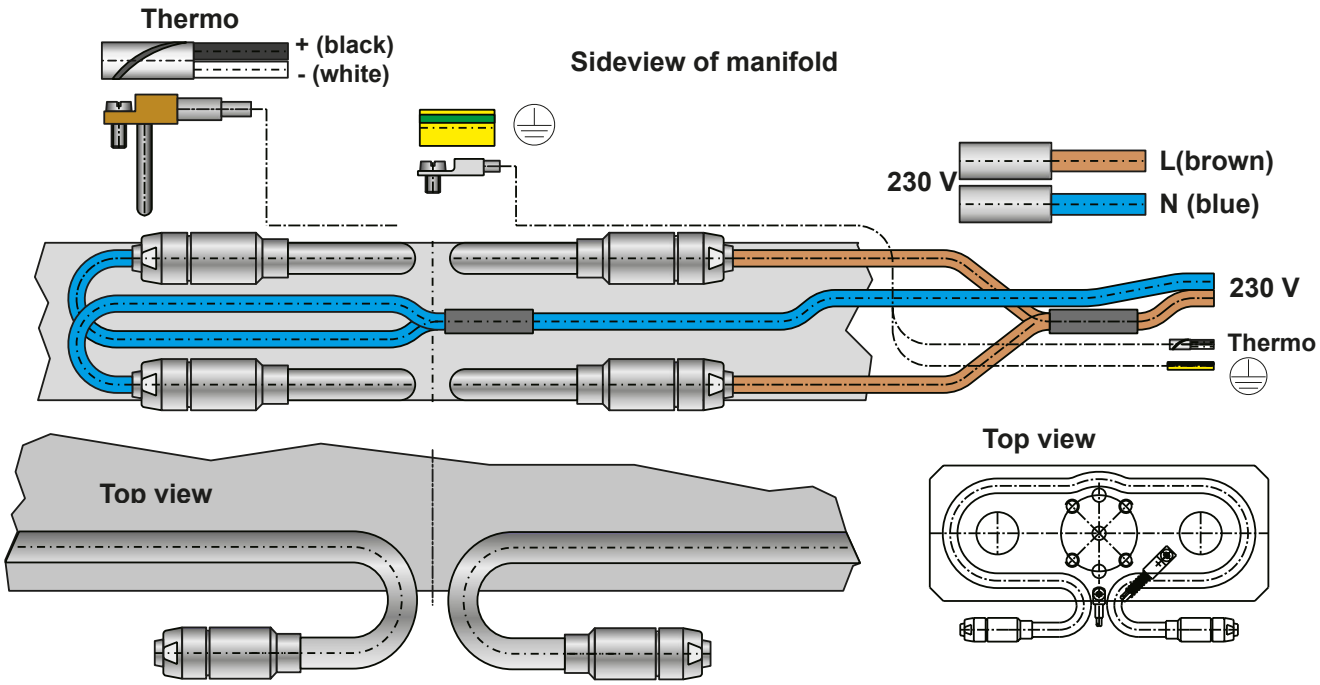

Figure 60: (z343-03) Cable assignment of HPS III manifolds (shown: one control zone)

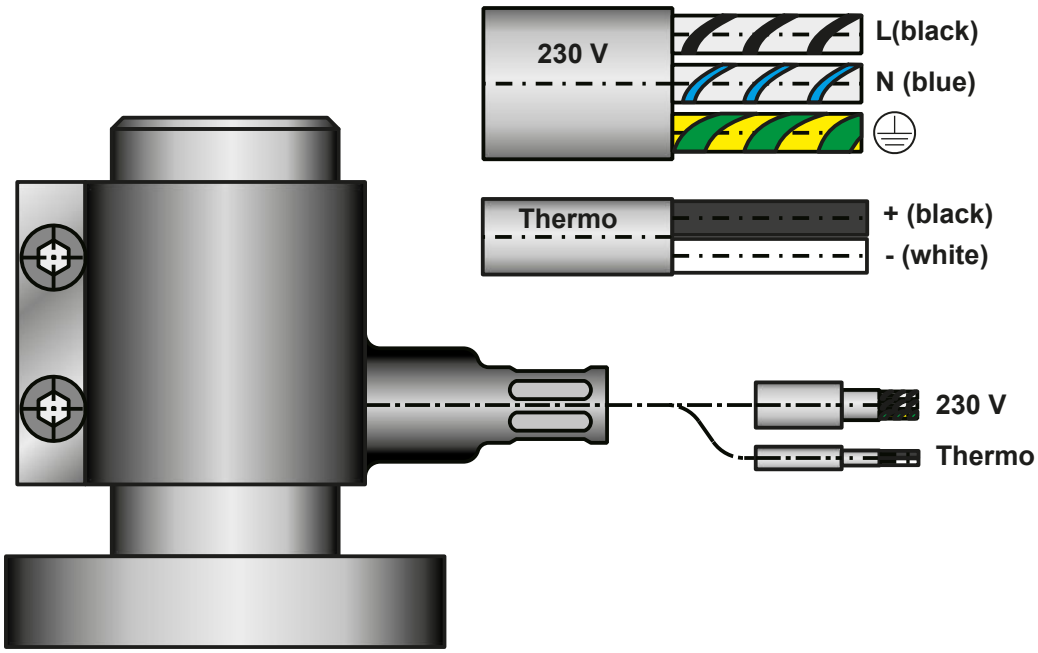

Figure 61: (z343-04) Cable assignment of heater bands for sprue bushs (one control zone)

Generally the cable pairs for heaters are brown and blue (manifold heaters) and orange and grey (nozzle heaters) respectively. A sufficient protective earthing of the hot runner system must be ensured.

Furthermore, thermocouples type J (Fe-CuNi) are used. The hot runner controller used must be designed to work with that type. The wiring follows the wiring plan of the hot runner system. Generally the cable pairs are black (+) and white (-).

General information for wiring of standard hot runner systems

Position of nozzles in the mould

Most EWIKON hot runner systems are delivered as complete hot halves. As far as there is no differing specification from the customer side, the position of the nozzles is defined as following: When viewing from the parting line in direction of the nozzle tips, the nozzles are numbered line-by-line from top left to bottom right according to the scheme shown below. If the manifold has multiple heaters, the same numbering scheme is applied. The power and thermo collective plugs are numbered consecutively:

(230 V: X-1.1, X-2.1, X-3.1... / Thermo: X-1.2, X-2.2, X-3.2....).

EWIKON recommends to apply this numbering scheme also when purchasing components instead of hot halves.

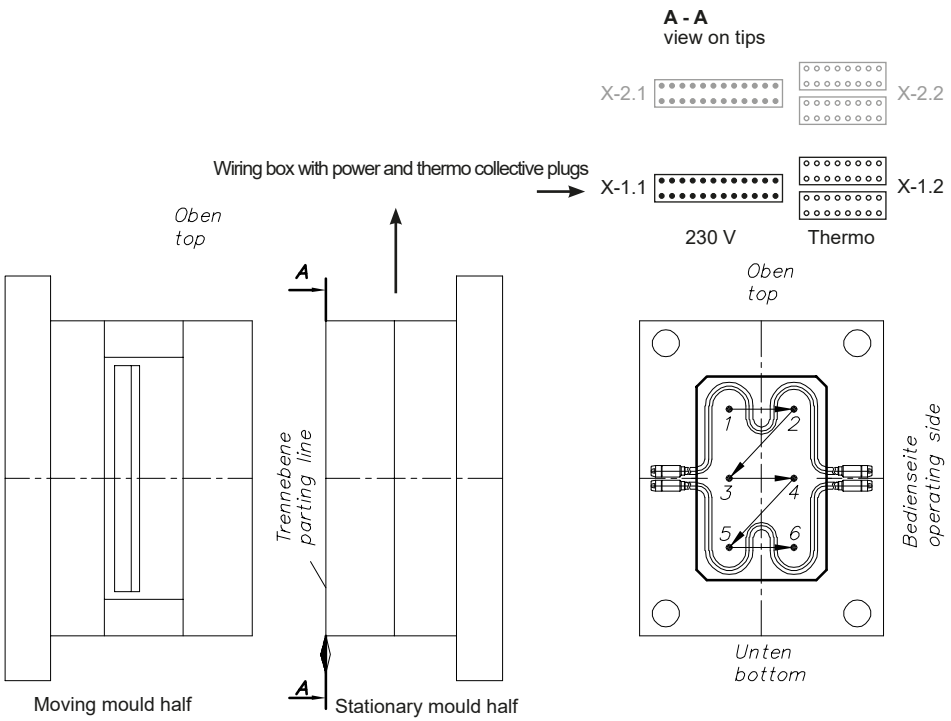

Figure 62: (z218-08) General information for wiring of standard hot runner systems

Wiring order (Example: 6-drop system):

The control zones are numbered consecutively, beginning at the position of the first nozzle (top left). Each control zone has a heater and a thermocouple assigned. First all nozzles (H-01 - H-06) should be wired, then all manifold heaters (M-01 - M-02) and at last the heater of the connecting nozzle (CN-01). Unless otherwise specified by the customer, the contact assignment follows DIN 16765, part A.

Detailed wiring instructions for standard system configurations are shown on the following pages.

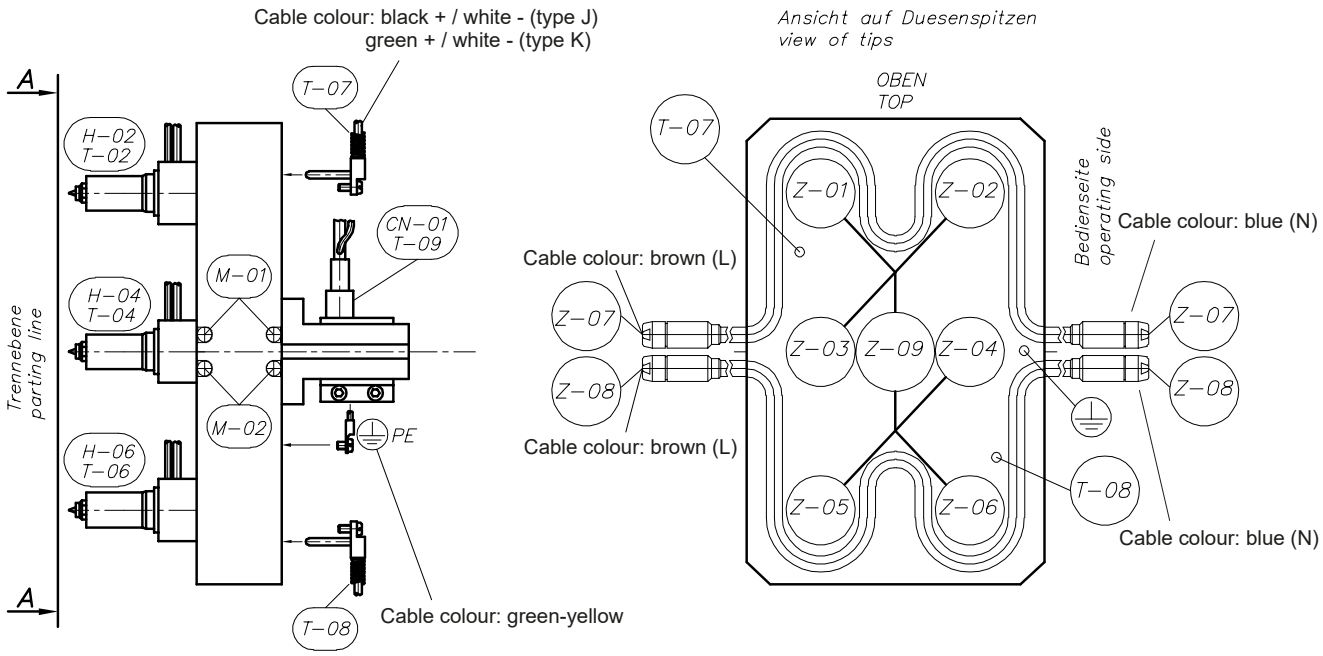

Figure 63: (z218-09) Wiring order (example: 6-drop system)

Legende	
Z	Control zone
H	Heater nozzle
M	Heater manifold
CN	Heater band sprue bush
T	Thermocouple
PE ⏚	Protective earth conductor
L	Phase conductor
N	Neutral conductor

Control zone Z	230 V	Thermo
Z-01	H-01	T-01
Z-02	H-02	T-02
Z-03	H-03	T-03
Z-04	H-04	T-04
Z-05	H-05	T-05
Z-06	H-06	T-06
Z-07	M-01	T-07
Z-08	M-02	T-08
Z-09	CN-01	T-09

5.6.3 Example: Wiring of 1-drop hot runner systems

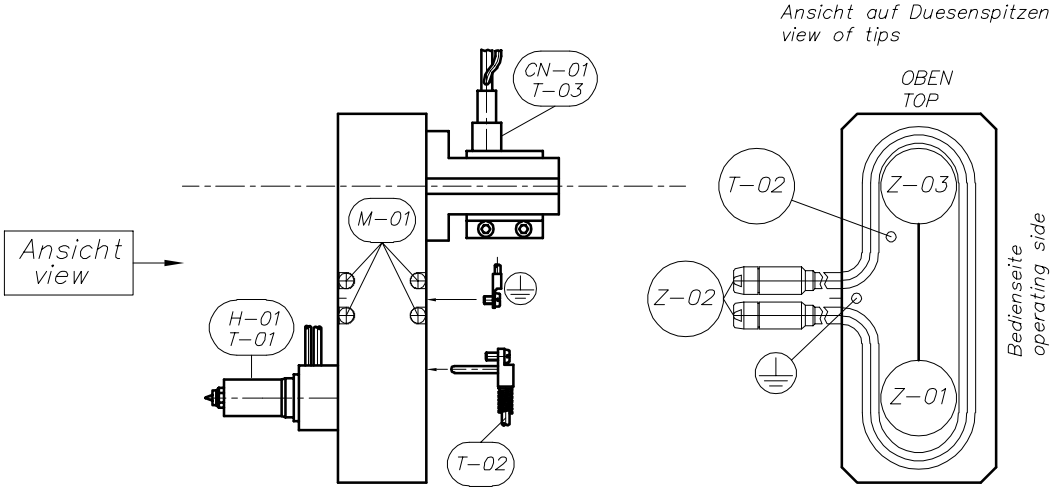

Figure 64: (z218-02) Wiring of standard-1-drop hot runner systems

Key to the symbols	
Z	Control zone
H	Heater nozzle
M	Heater manifold
CN	Heater band sprue bush
T	Thermocouple
PE ⏚	Protective earth conductor
L	Phase conductor
N	Neutral conductor
●	male
○	female

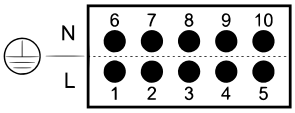

Figure 65: X-1.1

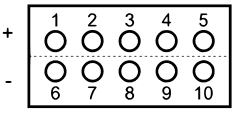

Figure 66: X-1.2

	230 V			Thermo		
Control zone Z	plug 230 V / 10-pin Nr. = X...		Contact L / N	Thermo / 10-pin Nr. = X...		Contact + / -
Z-01	X-1.1	H-01	1 / 6	X-1.2	T-01	1 / 6
Z-02	X-1.1	M-01	2 / 7	X-1.2	T-02	2 / 7
Z-03	X-1.1	CN-01	3 / 8	X-1.2	T-03	3 / 8

or

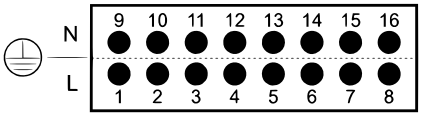

Figure 67: X-1.1

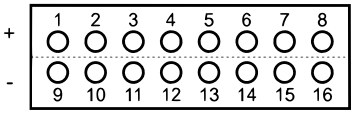

Figure 68: X-1.2

	230 V			Thermo		
Control zone Z	Plug 230 V / 16-pin Nr. = X...		Contact L / N	Thermo / 16-pin Nr. = X...		Contact + / -
Z-01	X-1.1	H-01	1 / 9	X-1.2	T-01	1 / 9
Z-02	X-1.1	M-01	2 / 10	X-1.2	T-02	2 / 10
Z-03	X-1.1	CN-01	3 / 11	X-1.2	T-03	3 / 11

5.6.4 Example: Wiring of 6-drop hot runner systems (manifold with 2 control zones)

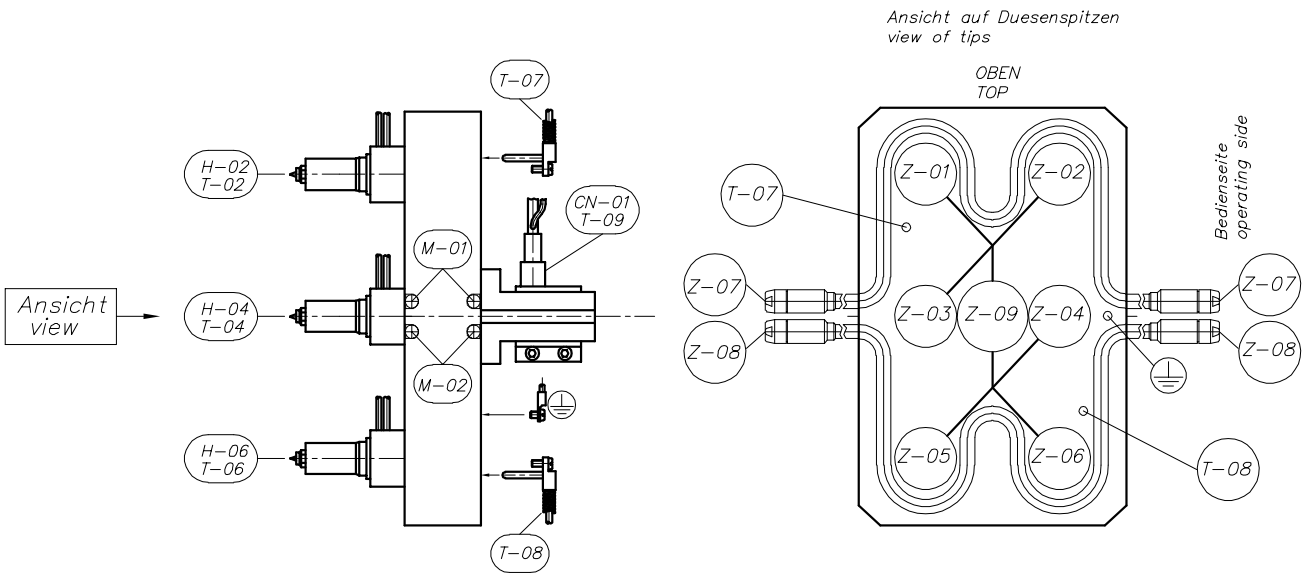

Figure 69: (z218-05) Wiring of standard-6-drop hot runner systems (manifold with two control zones)

Key to the symbols	
Z	Control zone
H	Heater nozzle
M	Heater manifold
CN	Heater band sprue bush
T	Thermocouple
PE ⏚	Protective earth conductor
L	Phase conductor
N	Neutral conductor
●	male
○	female

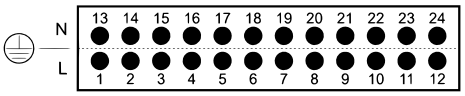

Figure 70: X-1.1

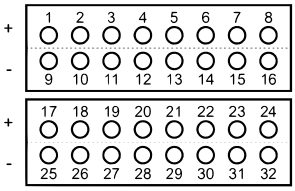

Figure 71: X-1.2

	230 V			Thermo		
Control zone Z	Plug 230 V / 24-pin Nr. = X...		Contact L / N	Thermo / 32-pin Nr. = X...		Contact + / -
Z-01	X-1.1	H-01	1 / 13	X-1.2	T-01	1 / 9
Z-02	X-1.1	H-02	2 / 14	X-1.2	T-02	2 / 10
Z-03	X-1.1	H-03	3 / 15	X-1.2	T-03	3 / 11
Z-04	X-1.1	H-04	4 / 16	X-1.2	T-04	4 / 12
Z-05	X-1.1	H-05	5 / 17	X-1.2	T-05	5 / 13
Z-06	X-1.1	H-06	6 / 18	X-1.2	T-06	6 / 14
Z-07	X-1.1	M-01	7 / 19	X-1.2	T-07	7 / 15
Z-08	X-1.1	M-02	8 / 20	X-1.2	T-08	8 / 16
Z-09	X-1.1	CN-01	9 / 21	X-1.2	T-09	17 / 25

5.7 Checks after installation

To be checked in cold condition

- Bores and connections for media (e.g. cooling circuits, hydraulic circuits) (optical check)
- Allocation of wiring according to the wiring scheme (see order specific documents)
- Resistance of the protective earth conductor
- Insulation resistances of the heating zones
- Check of cooling (function, correct piping): Are all components that require cooling supplied with water (is the flow rate sufficient)?

For all further checks the HPS III hot runner system must be heated to operating tem#perature in order to avoid damage to hot runner components.

CAUTION

Respect operating temperatures

Each hot runner system is individually designed for the material to be processed. Therefore, the specified operating temperatures must be observed. The temperature difference ΔT between hot runner temperature T_{HK} (processing temperature) and mould temperature T_{WZ}, must be strictly adhered to.

- Non-observance may cause an escape of melt inside the mould (ΔT too low) or damage to components (ΔT too large).

Ckeck of heaters by heating the HPS III hot runner system to operating temperature

- Switch on the mould cooling.
- Check if the thermocouple and power connections are allocated correctly by heating up each zone separately (for a short time).
- Check response of the respective thermocouple.
- When using a EWIKON controller this procedure can be automatically carried out by using the diagnosis function.

To be checked in heated condition (operating temperature)

- Leak tightness and function of drive units (hydraulic fluid, pressurised air) by repeatedly moving the valve pin to the end positions in manual mode while the mould is opened.
- Valve pin position (move valve pin to end position „closed“).
- Valve pin function (move valve pin repeatedly into end positions „open“ and „closed“).
- Leak tightness and function of mould cooling.

6 Start-up and instructions for operation

6.1 Safety instructions

DANGER

Insufficient protective conductor connection to the injection moulding machine

Risk of deadly electric shock or severe injuries due to live components.

- The operator must ensure that during startup of the system all electrical system components have been wired to to the protective conductor system or are protected by equivalent safety measures before applying electric voltage.
- When applying electric voltage to systems or to system components beyond specified normal operation, sufficient ground earth connection or equivalent safety measures must be ensured for each component.

DANGER

Raised injection pressure

The system is designed for an injection pressure of 2000 bar. When the cavity pressure is too high (e.g. by overpacking a cavity without limiting the injection pressure) components of the hot runner system may break and hot plastic melt can escape.

Injection moulding processes must only be carried out with maximum pressures of 2000 bar. If the process requires higher pressures a written permission of EWIKON Heißkanalsysteme GmbH is needed.

WARNING

Unwanted sudden escape of melt caused by thermal degradation, gas release of plastic material or caused by different thermal expansion of materials due to temperature differences

Heavy burns to body and extremities.

- Before operation the system must be heated through for at least 3-5 min.
- Only process materials which are approved for use with the system.
- The safety devices of the injection moulding machine must be active and working.

Recommended PPE,
see also Chapter 2.5.1:

CAUTION

A HPS III hot runner system must only be started up when used as intended within an injection mould.

Respect operating temperatures

For all further checks the HPS III hot runner system must be heated to operating temperature in order to avoid damage to hot runner components.

Each hot runner system is individually designed for the material to be processed. Therefore, the specified operating temperatures must be observed. The temperature difference ΔT between hot runner temperature T_{HK} (processing temperature) and mould temperature T_{WZ}, must be strictly adhered to.

Non-observance may cause an escape of melt inside the mould (ΔT too low) or damage to components (ΔT too large).

Improper processing of thermoplastics in the injection moulding process

The guidelines of the material manufacturer such as processing temperature and mould temperature must be observed. Otherwise the moulded parts can be faulty or the hot runner system can be damaged.

Risk of injuries during installation

During installation the following injuries may occur:

- Cut injuries due to sharp edges.
- Crushing of fingers or hand.

Leakage during operation

Using a wrong combination of radii of sprue bush and machine nozzle can result in unwanted escape of melt during the injection moulding process.

Observe system temperatures during installation / disassembly

Damage to the melt seal.

- Disassemble contour plate in cold condition.

NOTE

When processing materials with flame retardant additives or glass fibre reinforcements we recommend to purge the hot runner system with natural material of the same type without additives after end of production. This will facilitate the next start-up.

When conducting colour and material changes it is advantageous if the contour plate can be separated from the stationary mould half (nozzle side). Thus, the nozzle tips become accessible for cleaning and maintenance purposes. This is required when a colour change can not be successfully carried out by just purging the system.

6.2 Requirements for operation

- The radius of the sprue bush (R) or the radius of the contact surface of a single tip respectively has to be adapted to the radius of the machine nozzle (R_M) (recommendation: $R > R_M + 1$).
- For a better decompression the bore in the machine nozzle has to be adapted to the bore in the sprue bush or the single tip respectively (machine nozzle bore max. 1 mm smaller).
- The injection unit stays attached to the mould during cycle.
- Connect power cable, thermocouple collective cable and ground cable.
- Check if the thermocouple and power connections are allocated correctly by heating up each zone separately (for a short time).
- Before start-up valve gate systems have to be checked on tightness of water, oil and compressed air connections.
- In order to clearly identify the hot runner system attach the type plate with the order number prominently to the operator side of the mould.

6.3 Start-up of a HPS III hot runner system

NOTE

In general the start-up of a hot runner system with **HPS III single tips**, a **L2X system** as well as a **valve gate system** is carried out analougosly to the start-up of a system with HPS III-S / pro SHOT nozzles. Possible differences are specified in the text. Please pay special attention to the instructions for operating a valve gate sytem in Chapter 6.4, "Instructions for the operation of valve gate systems"

An HPS III hot runner system is **not designed or suitable** for dry running/validation runs at operating temperatures without plastic.

6.3.1 First-time start-up and filling of a HPS III hot runner system

- Switch on the mould cooling.
- Mould and barrel should have reached the recommended temperatures.
- Switch on the hot runner and let the humidity from the heaters dry out at a temperature between 100 °C and 120 °C for approx. 10 minutes (sequential start /compound heating mode of the controller).
- Set processing temperature and heat system for 3 - 5 minutes (sequential start /compound heating mode) so that the preload is ensured.
- Make sure that there is a sufficient barrel pressure. Without that leakage might occur between machine nozzle and mould. Fill the hot runner with approx. 300 - 400 bar back pressure until plastic emerges at the gates.
- When filling the hot runner system use natural material without additives especially if colour changes are planned or if materials with flame retardant additives and glass fibres respectively are used.
- Start moulding process.
- If intense mould cooling is required increase temperature by approx. 20 °C - 25 °C if necessary.

6.3.2 Start-up of an already filled HPS III hot runner system

- Switch on the mould cooling.
- Mould and barrel should have reached the recommended temperatures.
- Switch on the hot runner and let the humidity from the heaters dry out at a temperature between 100 °C and 120 °C for approx. 10 minutes (sequential start /compound heating mode of the controller).
- Set processing temperature and heat system for 3 - 5 minutes (sequential start /compound heating mode) so that the preload is ensured.
  For control units without automatic start-up function, first set the manifold to processing temperature minus 10 °C and only then switch on the nozzles. This takes into account the higher mass of the manifold and prevents the nozzles from remaining at processing temperature for an unnecessarily long time, especially in the case of materials with a critical tendency to degrade (e.g. POM, PBT).
- When material melts at the sprue bush remove cold slug and purge machine barrel – then start up mould.
- Start moulding process.
- If intense mould cooling is required increase temperature by approx. 20 °C - 25 °C if necessary.

6.3.3 Colour and material changes

1. In order to successfully carry out a colour change the hot runner system needs to be filled with natural material.
2. Fill the hot runner system as described under 6.3.1 "First-time start-up and filling of a HPS III hot runner system".
3. Mould articles using the first colour.
4. For the colour change increase barrel temperature by 20 °C - 40 °C and change to natural material.
5. Purge the barrel with natural material first, then purge the hot runner system and the barrel together with natural material.
6. When approx. 95 % of the purged material contains of natural material, increase the temperature of the hot runner by 30 °C - 50 °C and continue to purge with natural material until no further improvement can be achieved.
7. Set temperature back to standard settings.
8. Start moulding with new colour.

NOTE

If despite of intensive purging old material still remains visible in the moulded part (visible flow marks on the surface or inside transparent parts) the so called „cap“ the area of frozen plastic between nozzle tip and gate must be removed

Recommended tools for the following installation steps

The use of non-approved assembly tools may result in damage to the HPS III nozzles.

- Wire brush, soft (preferably brass wire, do not use brass-coated wire).
- Side cutter (preferably side cutter for electronics).

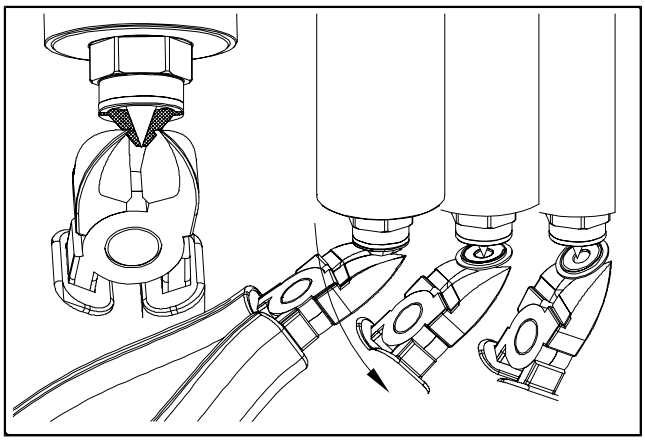

Figure 72: (z321-11) Removal of cap

Removal of „cap“

1. Precondition: the hot runner system is already filled with the new material!
2. Switch off the hot runner. Let the mould cooling stay switched on.
3. Dismantle the contour plate in cold condition. By doing this the nozzle tips become accessible.
4. Switch the hot runner on again.
5. As soon as the cap, the area of frozen plastic between nozzle tip and gate, starts to melt partially around the tip it can be removed by using a side cutter.
   Close the side cutter only so far that the cap can be pulled off. Closing it too far and with too much pressure can damage the heat conductive tip or the valve pin if a valve gate system is used.
6. Remaining material residues at the nozzle tip can be removed by using a wire brush (soft wire, see Chapter 5.3.1, "Tools and operating materials").
7. Switch off the hot runner. Let the mould cooling stay switched on.
8. Install the contour plate in cold condition.
9. Switch on the hot runner.
10. After processing temperature is reached start moulding.

6.4 Instructions for the operation of valve gate systems

NOTE

Use of gate exchange inserts

When using gate exchange inserts it must be ensured that the valve pin is only operated when the hot runner system is filled with melt.

When operating the valve pin in an unfilled system the gate exchange inserts can be pulled out of their fit and tilted when moving the valve pin backwards. This causes damage in the gating geometry.

When valve pins are operated in an unfilled system a clamping device must be provided in order to prevent the gate exchange inserts from being pulled out. Suitable solutions are the use of flat headed cylinder screws, clamping sleeves or retaining rings. Depending on the available installation space EWIKON can recommend a suitable clamping version.

In general the start-up of valve gate systems is carried out analogous to other externally heated systems (see Chapter 6.3.1, "First-time start-up and filling of a HPS III hot runner system" und Chapter 6.3.2, "Start-up of an already filled HPS III hot runner system"). However, when operating valve gate systems some additional instructions must be followed:

- In order to check the valve pin length mould and hot runner must have reached their operating temperature.
- Valve pin movements must be carried out at operating temperature only.

Instructions for disassembly

- When dismantling the mould from the machine or when disassembling the hot runner system the valve pins should always be moved into their back position (gate open) in order to prevent them from being damaged.
- Before disassembling the hot runner system all hot runner components must have reached ambient temperature. For this the mould cooling should stay switched on for a sufficient time after the heaters for nozzles and manifold have been switched off.

Pneumatic drive:

- Pneumatic pressure: see Chapter 3.3, "Hydraulic / pneumatic specifications (drive units)".
- It is recommended to lubricate the compressed air with fully synthetic oil. The amount (drops/hour) depends on the number of cavities and the nozzle size.
- Example: valve gate system with 6 mm flow channel, 24-drop: 2 drops/hour (worth 12 drops/1000 liters of compressed air).

Hydraulic drive:

- To prevent thermal decomposition of the hydraulic oil the drive unit is equipped with a direct (screwed-on drive unit) or indirect (e.g. cooling channels in the clamping plate) water cooling. It must be ensured that the backflow temperature of the water does not exceed 85 °C.
- The system must only be heated when the mould cooling is switched on.
- Hydraulic pressure: see Chapter 3.3, "Hydraulic / pneumatic specifications (drive units)".

Electric drive:

- The maximum permissible environmental temperature for the drive units is 70 °C (158 °F).
- Actuation of the drive units only when the hot runner system has reached set temperature.

Please make sure that the supply channels have a sufficient size. If possible, the diameter should be between 8 mm and 10 mm. Especially when using the valve gate as system nozzle a balanced supply channel layout should be provided.

6.4.1 Machine downtimes > 5 minutes of systems with HPS III-S nozzles (system / single tip / single cavity)

- For machine downtimes of more than 5 minutes the temperature of the hot runner system should be decreased (50°C - 60°C below processing temperature) in order to avoid thermal degradation of the material in the system.
- Adhere to the specified heat up times.
- When processing sensitive materials (e.g. POM) purge with a neutral material (natural material, not coloured, e.g. polypropylene) before shutting down the machine.
- The injection moulding machine should feature a signal input and output to read and send error messages from and to the hot runner controller.
- Modern hot runner controllers feature an automatic decreasing function.

6.4.2 Dismantling the mould after the end of production / dismantling the hot runner

- Please observe the instructions in Chapter 6.4.1 before dismantling.
- When dismantling the mould from the machine or when disassembling the hot runner system the valve pins should lways be moved into their back position (gate open) in order to prevent them from being damaged. The valve pin can then not be damaged during installation and removal. If no maintenance is planned, the valve pins can remain in the front position (gate closed).
- If the hot runner should be removed from the mould, the valve pins must be moved to the rear position (gate open).
- Before dismantling the mould or disassembling the hot runner system, all hot runner components must have reached ambient temperature. For this the mould cooling should stay switched on for a sufficient time after the heaters for nozzles and manifold have been switched off.

6.5 Possible malfunctions

6.5.1 Troubleshooting

Error	Possible cause / measure
Temperature of control zone exceeds set temperature	• Check if the thermocouple and power connections are allocated correctly (heat up each zone separately).
Controller indicates “broken thermocouple”. No temperature value is displayed	• Check thermocouple at the nozzle and/or thermocouple cable and controller respectively.
Thermocouple indicates a temperature value too low	• Jammed thermocouple (temperature at the position in the mould where it is jammed is displayed, normally between mould and room temperature).
Thermocouple indicates wrong temperature value	• Incorrect sensor type stored in the controller.
Thermocouple indicates value zero	• Thermocouple reverse-poled, check thermocouple circuit.
Burn marks on a part in a cavity in a multi-cavity mould	• Check the temperature of the corresponding nozzle. • Heating output shows 100 % (thermo cable jammed).
Short decrease or increase in temperature (temperature fluctuations)	• Power or thermal cables are not making proper contact. • Humidity in the heating element.
Nozzle does not heat up properly	• Check assembly geometry of the hot runner. • Check resistance of the affected heating zone and the thermocouple.
Nozzles are drooling	• Temperature of nozzles too high. • Machine nozzle: ◦ Check the outlet diameter of the machine nozzle. Max. 1 mm smaller than the inlet diameter of the sprue bush. ◦ Increase both diameters by 1 - 2 mm (**Note:** consultation with EWIKON necessary) • Increase decompression. • Gate point too large.
Hot runner leakage	• No sufficient preload. • Fits used for sealing of the system are not OK.

Table 14: Errors/Measures

7 Maintenance

7.1 Safety instructions

NOTE

Read operating manual

Before starting installation, the installation procedure described and all warnings, safety and installation instructions listed must be read and understood.

Furthermore, during installation the warning, safety and installation notes for installation of EWIKON hot runner systems and components as specified in Chapter 5.2, "General safety instructions" must be followed.

Warnings and safety instructions

The following warnings and safety instructions must be observed during the maintenance and servicing of **all** types of HPS III hot runner components and apply to all assembly steps. Additional specific instructions are listed in the respective installation step.

WARNING

Hot surfaces / hot material (plastic melt)

- Body burns by hot surfaces.
- Let the HPS III hot runner system and all components cool down completely to ambient temperature before starting maintenance work / disassembling. Never touch material leaking from the nozzle/the mould/the hot runner or the material inlet. Even material that seems to be cooled down already may still be hot inside the core and cause burns.
- Please make sure you wear your personal protective equipment (PPE).

Recommended PPE, see also Chapter 2.5.1:

DANGER

Installation with activated voltage supply

Risk of death by electric shock and severe injuries caused by live components.

- During all installation steps that do not require heating, the hot runner components and the injection mould must be disconnected from the power source.

WARNING

Sharp edges

- Cut injuries to body and extremities, mainly to the hands.

WARNING

Heavy components

- Crushing of fingers or hand.

WARNING

Check of live components before installation

The electrical equipment of the hot runner system should be checked, especially those areas which will no longer be accessible after installation. Physical injuries such as an electric shock can be prevented that way.

Please check

- if cables are kinked or squeezed.
- if cable insulations are undamaged.

CAUTION

Pay attention to system temperature during installation/deinstallation

Damage to melt seal.

- The contour plate must only be installed and deinstalled when the hot runner system has cooled down.
- If the nozzle temperature is too high when the contour plate is installed/deinstalled the melt sealing can be damaged. This can cause leakage of the system.

CAUTION

Problems during deinstallation of nozzle tips

Damage of nozzle tips.

- If a nozzle tip can not be screwed out use the controller to raise the nozzle temperature in steps.
- If the nozzle tip is still not screwable please contact the EWIKON customer service. See chapter 7.10 "Instructions for service and repair".

CAUTION

Cleaning of threads and sealing surfaces

Damage to sealing surfaces during installation.

- The nozzle should be cleaned externally and any plastic residue removed before installation or maintenance work.
- Threads and sealing surfaces must be checked on cleanliness and free movement.
- Clean sealing surfaces and threads by using suitable cleaning tools (best directly after deinstallation of nozzle tip when the plastic is still viscous). Appropriate cleaning tools (brushes, scraper) must be made of materials which are softer than the steel of the hot runner components (soft metals or brass), also see Chapter 5.3.1, "Tools and operating materials". Hereby, the sealing surfaces and threads can not be damaged during the cleaning process.

7.2 Instructions for maintenance

NOTE

Deferred, incomplete and improper maintenance work causes increased wear on single components of the HPS III hot runner system.

- Maintenance work must be carried out according to the maintenance schedule completely and within the indicated time intervals.
- Specific maintenance work must only be carried out by the qualified staff which is specified in the maintenance schedule.

In addition to the proper operation a careful maintenance is required in order to assure a long service life as well as a trouble-free function of the HPS III hot runner system. Beside inspection and repair this is a preventive measure to keep the HPS III hot runner system in perfect operating condition.

Please adhere to the time intervals indicated in the maintenance schedule.

It is recommended to document the maintenance work carried out in written form.

7.3 Maintenance schedule

Component/ function	Measure	Staff	Interval	Remark

Table 15: Example for a maintenance schedule

7.4 Checklist for possible maintenance work

Action	Open system	Valve gate system
Check all components optically for defects	X	X
Check seal fitting diameter of the nozzle, check the runout precision	X	X
Check tip insert (note: nozzle tip one-piece or two-piece?)	X	X
Check all cables visually for defects	X	X
Check thermocouple measurements and compare with delivery status	X	X
Check heating measurements and compare with delivery status	X	X
Carry out insulation test (if available by using an electrical tester)	X	X
Check the gate for wear		X
Check the valve pin in the valve pin guide area at manifold height		X
Check the sealing element in the manifold		X
If leakage: analysis of the cause • Mouthpiece • Valve pin seal • Sprue bushing • Between nozzle and manifold	X	X
Check drive units for function/tightness		X
Check all water circuits for flow and tightness	X	X

Table 16: Checklist for possible maintenance work

7.5 Installation / deinstallation of nozzle tips

7.5.1 General information

The installation / deinstallation procedure for nozzle tips described in the following is valid for HPS III-S / pro SHOT nozzles for front and standard installation as well as for HPS III-SXE single tips.

The nozzle tip exchange for L2X Drop-in hot runner systems is carried out analogous to a HPS III system. If the nozzle tip is installed/deinstalled while the L2X system is not installed in a mould it has to be fixed by using clamps or screw clamps.

One-piece nozzle tips

One-piece nozzle tips consist of the nozzle tip and a belonging part which is permanently connected with the nozzle tip and can not be separated.

One piece nozzle tips have only one item number (example: Fig. 73, pos. 1.7, pos. 1.8 or pos. 1.9).

Two-piece nozzle tips

Two-piece nozzle tips consist of the nozzle tip (pos.1.3) and another component like for example a nosepiece (pos. 1.4), screw-on gate bushes (pos. 1.5) or extended screw-on gate bushes (pos. 1.6).

Two-piece nozzle tips always have a separate item number for each of their components.

TIP

In case that a cleaning of the flow channel of the nozzle is required EWIKON offers a maintenance mouthpiece with drill guide. See Chapter 5.3.1, "Tools and operating materials".

The maintenance mouthpiece is installed after the tip insert has been removed (replaces the tip insert). It allows the precise insertion of a drill bit to remove most of the frozen plastic in the flow channel. The diameter of the drill bit should be 1/10 mm smaller than the flow channel diameter of the nozzle. Afterwards, remaining residues can be removed by using a soft wire brush (see Chapter 5.3.1, "Tools and operating materials").

7.5.2 Versions of nozzle tips, nosepieces and screw-on gate bushes

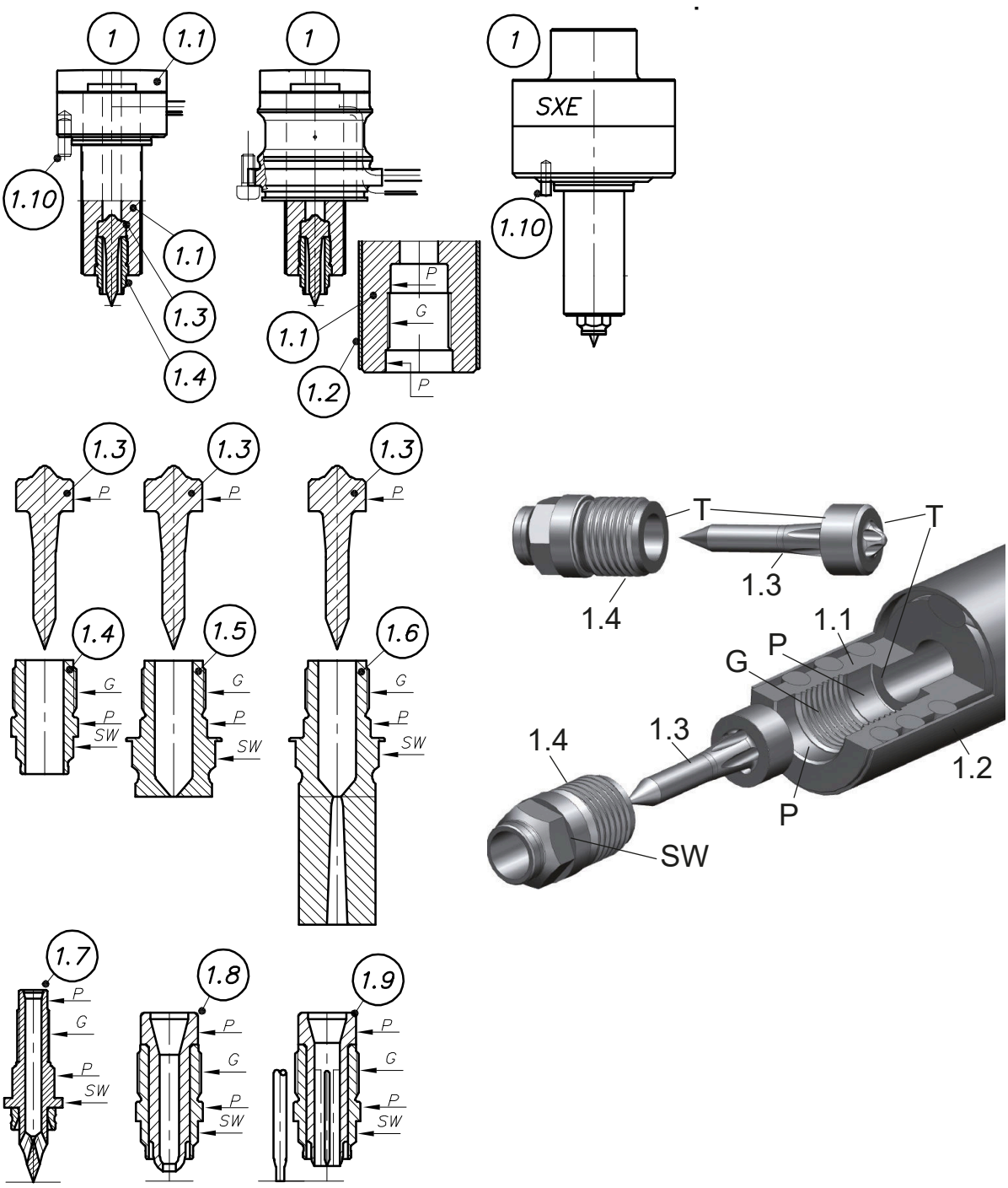

Figure 73: (z352-01) Overview of the different versions of nozzle tips, mouth pieces and screw-on gate bushes

Pos. 1	Example: HPS III-S / pro SHOT nozzle for standard installation HPS III-S / pro SHOT nozzle for front installation HPS III-SXE single tip
Pos. 1.1	Pressure tube with thread (G) and fits (P)
Pos. 1.2	Protective tube
Pos. 1.3	Nozzle tip
Pos. 1.4	Mouthpiece
Pos. 1.5	Screw-on gate bush
Pos. 1.6	Extended screw-on gate bush
Pos. 1.7	Nozzle tip with sealing ring (one-piece)
Pos. 1.8	Nozzle tip with nosepiece (one-piece)
Pos. 1.9	Nozzle tip with nosepiece (one-piece)
Pos. 1.10	Dowel pin (ISO 8735, lock against rotation)
G	Thread
P	Fit
SW	Width across flats
T	Surfaces for blueing

7.5.3 Exchange of nozzle tips with nozzle installed in the mould

Standard installation

An exchange of nozzle tips must only be carried out when the nozzle is locked against rotation by a dowel pin in the mould.

Otherwise the heater or the thermocouple may be teared off.

Attention:
When HPS III-S nozzles with flow channel Ø 3 and 4.5 mm for standard installation are used the installation of a dowel pin is not possible. Thus, the nozzle tips can not be exchanged with the nozzle installed in the mould.

Furthermore, a tip exchange inside the mould for HPS III-SXE single tips is only possible when the nozzle is fixed in the clamping plate with the locating ring. Otherwise it may fall out and be damaged.

Front installation

A nozzle tip exchange for nozzles for front installation which are screw connected to the mould is possible without a lock against rotation.

7.5.4 Exchange of nozzle tips outside the mould

Clamping of nozzle in a vice

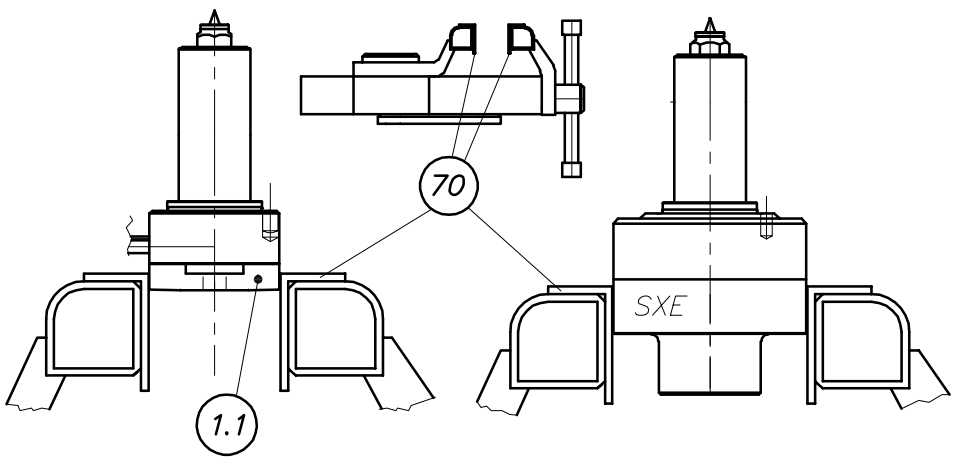

Figure 74: (z352-03) Clamping of a deinstalled HPS III nozzle in a vice

CAUTION

Clamping of nozzle in a vice

The nozzle must be clamped in the indicated areas only to avoid damage.

If it is necessary to heat up the nozzle to deinstall the nozzle tip, the vice must be grounded.

Exchange of nozzle tips outside the mould

To exchange a nozzle tip outside the mould a vice is required. Protective jaws (pos. 70, preferrably made from aluminium), must be used to avoid damage to the nozzle.

The nozzle must always be clamped at the pressure tube (pos. 1.1). A HPS III-SXE single tip is clamped at the nozzle body (see Fig. 74).

7.5.5 Deinstallation of one-piece nozzle tips

WARNING

Hot surfaces

Burns to the body caused by hot surfaces.

NOTE

For HPS III-S / pro SHOT nozzles for standard installation and for HPS III-SXE single tips, a lock against rotation (dowel pin, pos 1.10) must be installed in the mould for exchanging the nozzle tips.

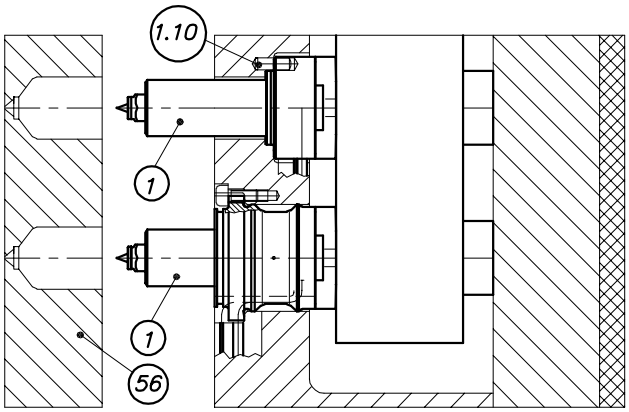

Figure 75: (z352-07) Deinstallation of contour plate (HPS III-S / pro SHOT nozzle)

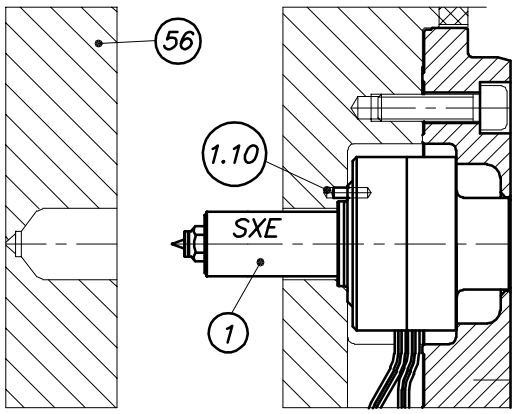

Figure 76: (z352-08) Deinstallation of contour plate (HPS III-SXE

ATTENTION: All warnings and safety instructions listed in Chapter 7.1 must be read and understood before starting installation.

Recommended PPE,
see also Chapter 2.5.1:

1. To carry out a nozzle tip exchange while the nozzle is installed inside the mould deinstall the contour plate (pos. 56) in cold condition. For a nozzle tip exchange outside the mould clamp the nozzle in a vice (see Fig. 74) and connect it to a controller.
2. Heat up nozzle (pos. 1) to 220 °C (428 °F).
3. Unscrew the nozzle tip (pos. 1.9) from the pressure tube (pos. 1.1) by using a ring wrench (see Chapter 5.3.1, "Tools and operating materials").
   Important: Before deinstalling a valve gate nozzle tip the valve pin must be moved to position „open“.
4. Clean the nozzle tip thoroughly by using a brass wire brush (see Chapter 5.3.1, "Tools and operating materials"). If necessary use a hot air gun with a maximum temperature of 460 °C (860 °F).
5. Check all surfaces for cleanliness. All contact surfaces at the pressure tube and the nozzle tip should be metallic bright.

single tip)

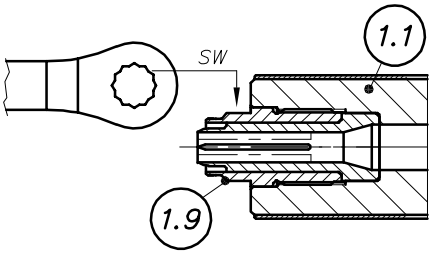

Figure 77: (z352-13) Unscrewing of nozzle tip

7.5.6 Installation of one-piece nozzle tips

WARNING

Hot surfaces

Burns to the body caused by hot surfaces.

NOTE

For HPS III-S / pro SHOT nozzles for standard installation and for HPS III-SXE single tips, a lock against rotation (dowel pin, pos 1.10) must be installed in the mould for exchanging the nozzle tips.

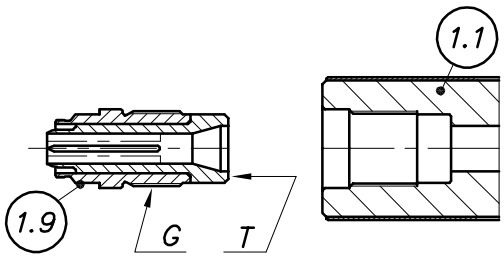

Figure 78: (z352-14) Installation of nozzle tip

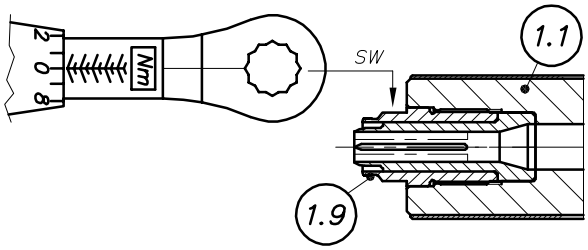

Figure 79: (z352-15) Tightening of nozzle tip

ATTENTION: All warnings and safety instructions listed in Chapter 7.1 must be read and understood before starting installation.

Recommended PPE,
see also Chapter 2.5.1:

1. The contour plate must be deinstalled.
2. Apply a thin and even coat of engineer's blue (see Chapter 5.3.1, "Tools and operating materials") to the contact surface of the cold nozzle tip (pos. 1.9 / surface T).
3. Apply high temperature installation paste (see Chapter 5.3.1, "Tools and operating materials") to the thread of the nozzle tip (surface G).
   Attention: Surfaces where engineer's blue is applied must not get in contact with the installation paste because otherwise the transfer of the blue is falsified.
4. Screw the nozzle tip into the pressure tube (pos. 1.1) and tighten with the matching tightening torque. See Chapter 9.3, "Tightening torques for tip inserts".
   Important: Before installing a valve gate nozzle tip the valve pin must be moved to position „open“.
5. Unscrew and deinstall the nozzle tip again and check the transfer of the blue. The surface T between nozzle tip and pressure tube (pos. 1.1) must show an even ring-shaped transfer of the blue.
6. Clean all surfaces from engineer's blue.
7. Heat up nozzle to 220 °C (428 °F).

8. Apply high temperature installation paste to the thread of the nozzle tip (surface G) again. Install nozzle tip again as described under 4.
9. Let the nozzle cool down before carrying out further work steps.

7.5.7 Demontage von zweiteiligen Düsenspitzen

WARNING

Hot surfaces

Burns to the body caused by hot surfaces.

NOTE

For HPS III-S / pro SHOT nozzles for standard installation and for HPS III-SXE single tips, a lock against rotation (dowel pin, pos 1.10) must be installed in the mould for exchanging the nozzle tips.

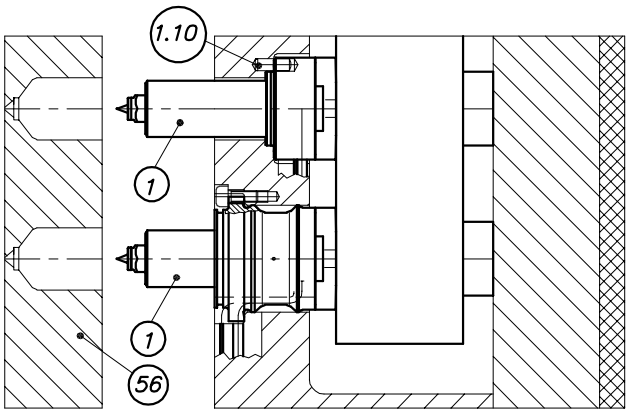

Figure 80: (z352-07) Deinstallation of contour plate (HPS III-S / pro SHOT nozzle)

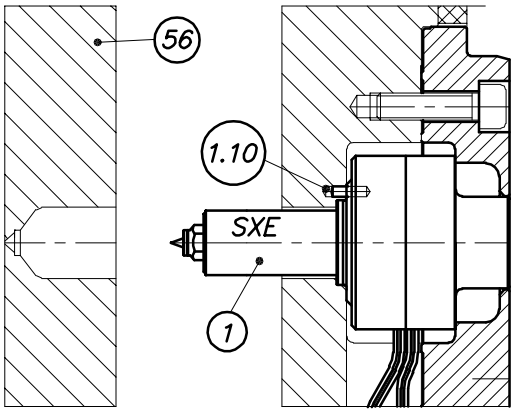

Figure 81: (z352-08) Deinstallation of contour plate (HPS III-SXE single tip)

ATTENTION: All warnings and safety instructions listed in Chapter 7.1 must be read and understood before starting installation.

Recommended PPE,
see also Chapter 2.5.1:

1. To carry out a nozzle tip exchange while the nozzle is installed inside the mould deinstall the contour plate (pos. 56) in cold condition. For a nozzle tip exchange outside the mould clamp the nozzle in a vice (see Fig. 74) and connect it to a controller.
2. Heat up nozzle (pos. 1) to 220 °C (428 °F).

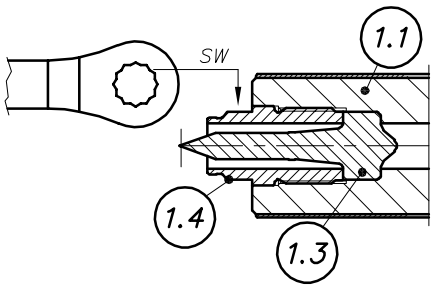

Figure 82: (z352-09) Unscrewing of nose piece

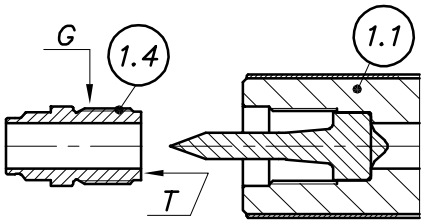

Figure 83: (z352-10) Nose piece removed

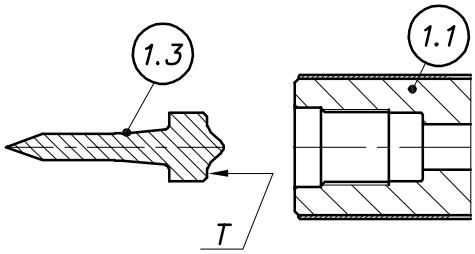

Figure 84: (z352-11) Disassembly of nozzle tip

3. Unscrew the nosepiece (pos. 1.4) from the pressure tube (pos. 1.1) by using a ring wrench (see Chapter 5.3.1, "Tools and operating materials").
4. Grip the shaft of the nozzle tip (pos. 1.3) with a pair of pliers and pull it out of the pressure tube with slight rotary motions. Proceed carefully to avoid damage.
5. Clean nozzle tip and nosepiece thoroughly by using a brass wire brush (see Chapter 5.3.1, "Tools and operating materials"). If necessary use a hot air gun. The temperature must not exceed 400 °C (752 °F).
6. Check all surfaces for cleanliness. All contact surfaces at the pressure tube (pos. 1.1), nozzle tip (pos. 1.3) and nosepiece (pos. 1.4) should be metallic bright.

7.5.8 Installation of two-piece nozzle tips

WARNING

Hot surfaces

Burns to the body caused by hot surfaces.

NOTE

For HPS III-S / pro SHOT nozzles for standard installation and for HPS III-SXE single tips, a lock against rotation (dowel pin, pos 1.10) must be installed in the mould for exchanging the nozzle tips.

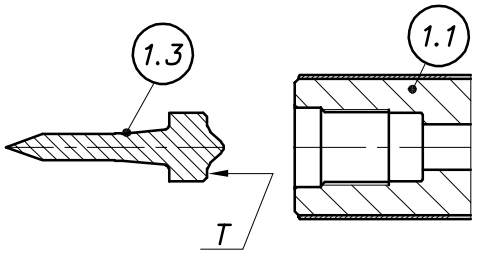

Figure 85: (z352-11) Installation of nozzle tip

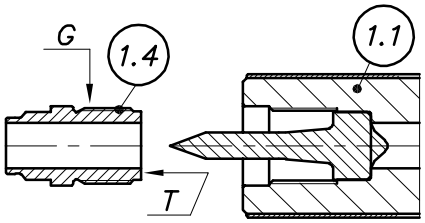

Figure 86: (z352-10) Nozzle tip installed

ATTENTION: All warnings and safety instructions listed in Chapter 7.1 must be read and understood before starting installation.

Recommended PPE,
see also Chapter 2.5.1:

1. The contour plate must be deinstalled.
2. Apply a thin and even coat of engineer's blue (see Chapter 5.3.1, "Tools and operating materials") to the contact surface (surfaces T) of the cold nozzle tip (pos. 1.3) and the nosepiece (pos. 1.4).
3. Slide the nozzle tip carefully and without tilting into the pressure tube (pos. 1.1) up to the stop.
4. Apply high temperature installation paste (see Chapter 5.3.1, "Tools and operating materials") to the thread of the nosepiece (surface G).
   Attention: Surfaces where engineer's blue is applied must not get in contact with the installation paste because otherwise the transfer of the blue is falsified.
5. Slide the nosepiece carefully over the nozzle tip, screw it into the pressure tube and tighten with the matching tightening torque. See Chapter 9.3, "Tightening torques for tip inserts".
6. Unscrew and deinstall nosepiece and nozzle tip again and check the transfer of the blue. The surfaces T between nozzle tip and pressure tube as well as between nosepiece and nozzle tip must show an even ring-shaped transfer of the blue.
7. Clean all surfaces from engineer's blue.
8. Heat up nozzle to 220 °C (428 °F).

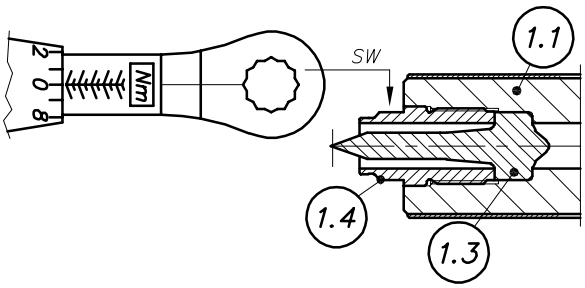

Figure 87: (z352-12) Tightening of nozzle tip with matching torque

9. Apply high temperature installation paste to the thread of the nosepiece (surface G) again. Install nozzle tip and nosepiece again as described under 3. and 5. First, screw in the nosepiece hand-tight (< tightening torque) and wait until both parts have reached the nozzle temperature. Then tighten with the matching tightening torque. See Chapter 9.3, "Tightening torques for tip inserts".
10. Let the nozzle cool down before carrying out further work steps.

7.6 Exchange of a thermocouple on HPS III-S / pro SHOT / HPS III-SXE nozzles

7.6.1 Clamping of nozzle in a vice

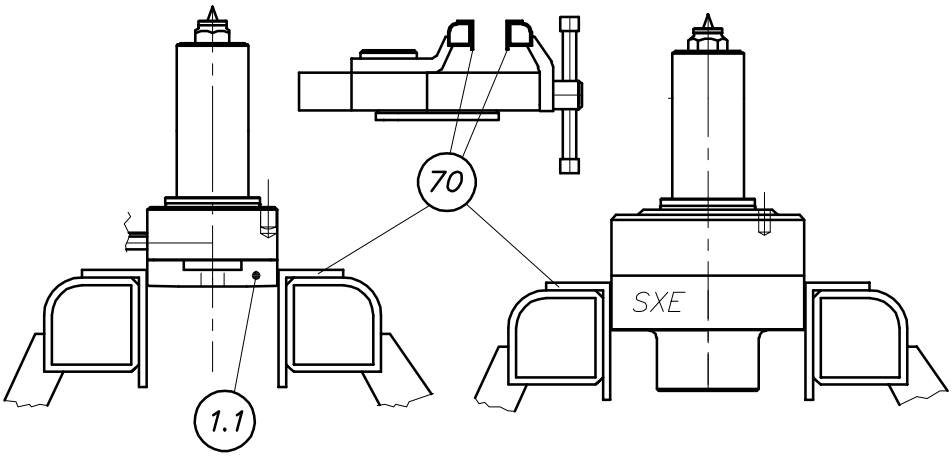

Figure 88: (z352-03) Clamping of a deinstalled HPS III nozzle in a vice

CAUTION

Clamping of nozzle in a vice

The nozzle must be clamped in the indicated areas only to avoid damage.

If it is necessary to heat up the nozzle to deinstall the nozzle tip, the vice must be grounded.

For exchanging the thermocouple a vice is required. Protective jaws (pos. 70, preferrably made from aluminium), must be used to avoid damage to the nozzle.

The nozzle must always be clamped at the pressure tube (pos. 1.1). A HPS III-SXE single tip is clamped at the nozzle body (see Fig. 88).

7.6.2 HPS III-S3 nozzles

WARNING

Check function of thermocouple

- Check resistance of thermocouple before and after installation to ensure that is has not be damaged during installation.

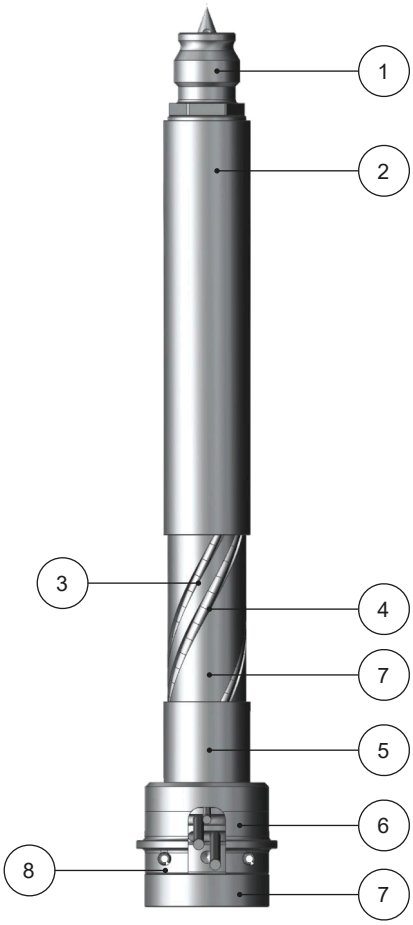

Figure 89: HPS III-S3 nozzle for standard installation

Pos. 1	Tip insert
Pos. 2	Protective tube
Pos. 3	Thermocouple
Pos. 4	Heater
Pos. 5	Support ring
Pos. 6	Nozzle body
Pos. 7	Pressure tube
Pos. 8	Spring pins

ATTENTION: All warnings and safety instructions listed in Chapter 7.1 must be read and understood before starting installation.

Recommended PPE,
see also Chapter 2.5.1:

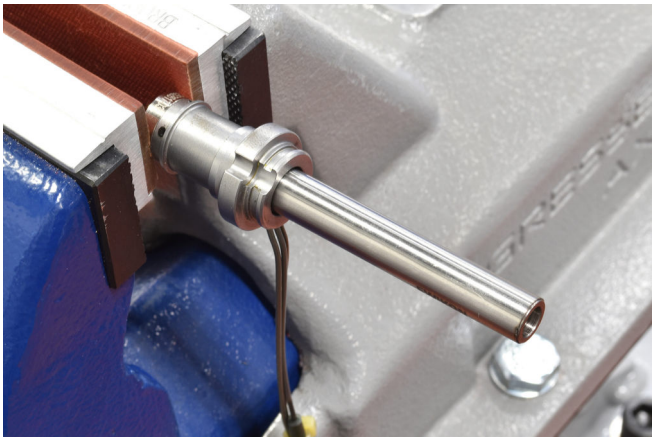

Figure 90: Clamp the nozzle

1. Disassemble tip insert if necessary. Pay attention to the notes in Chapter 7.5, "Installation / deinstallation of nozzle tips".
2. Clamp the nozzle in the vice at the pressure tube (see "Fig. 88: (z352-03) Clamping of a deinstalled HPS III nozzle in a vice").

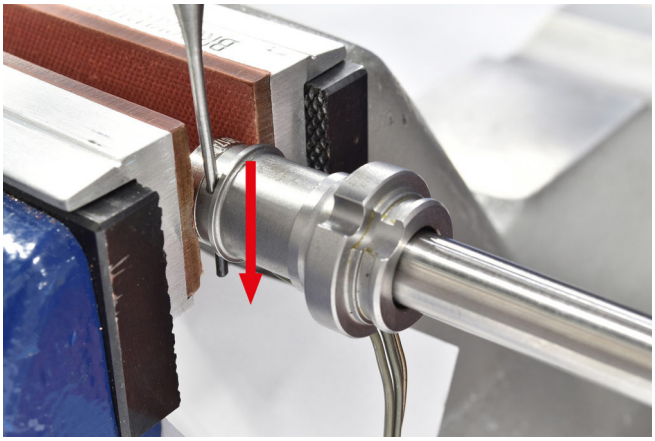

Figure 91: Remove the spring pins

3. Knock out the spring pins (ISO 8752) by using a pin punch and a hammer (see Chapter 5.3.1, "Tools and operating materials") herausschlagen.

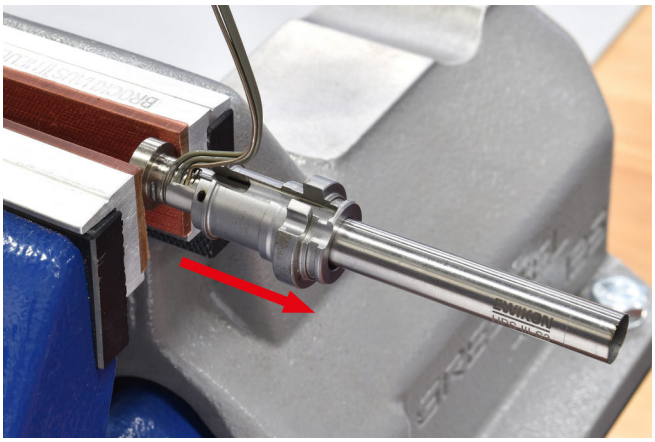

Figure 92: Pull off the nozzle body

4. Pull off the nozzle body.

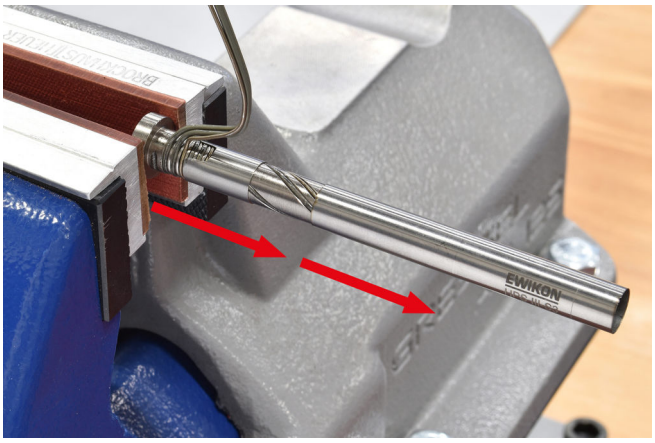

Figure 93: Pull off the protective tube and the support ring

5. Pull off the protective tube. If necessary apply WD 40 penetrating oil (see Chapter 5.3.1, "Tools and operating materials").
6. Pull off the support ring.

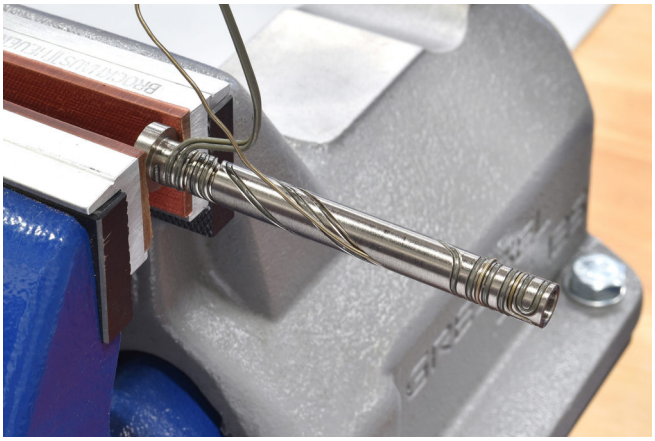

Figure 94: Disassemble the broken thermocouple

7. Disassemble the broken thermocouple from the cutout and pull it out of the bore in the nozzle.

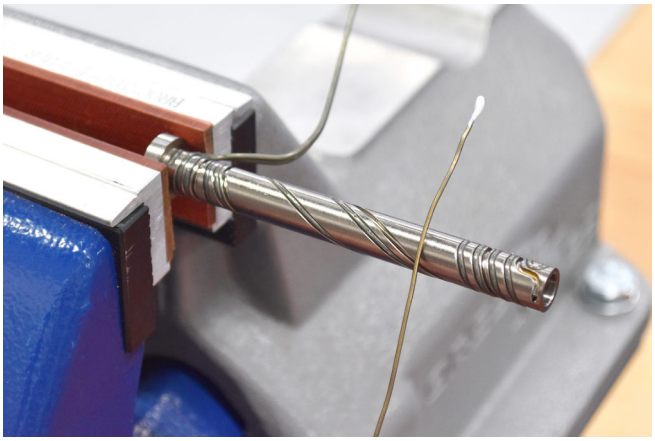

Figure 95: Coated tip of the thermocouple

8. Coat the tip of the new thermocouple with heat transferring paste (see Chapter 5.3.1, "Tools and operating materials") and insert it into the bore in the nozzle as far as it will go.
9. Place the thermocouple in the cutout and wind it carefully around the nozzle until the cable exit is reached. If necessary fix the thermocouple carefully during bending by using a pair of pliers.

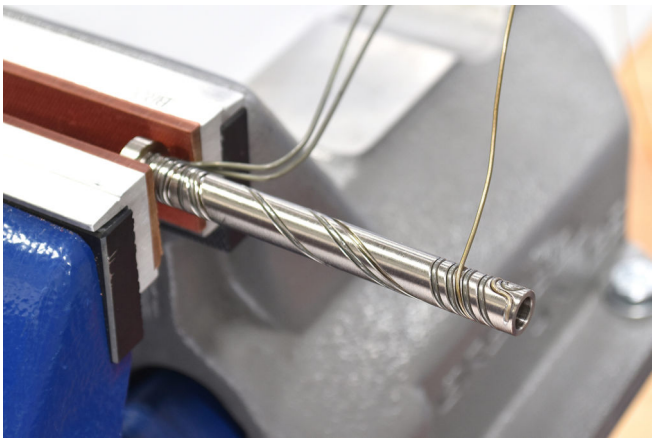

Figure 96: Installation of the new thermocouple

Figure 97: Pre-centre before installing the spring pins

10. Install the support ring.
11. Install the protective tube.
12. Install the nozzle body and fix it with the spring pins. Use a suitable pin to pre-centre nozzle body and pressu#re tube to avoid rotation against each other.
13. Check functioning of the new thermocouple by heating up the nozzle with a controller
14. For notes for installation of the nozzle please refer to Chapter 5.5, "Montage und Einbau".

7.6.3 HPS III-S4.5 nozzles

WARNING

Check function of thermocouple

- Check resistance of thermocouple before and after installation to ensure that is has not be damaged during installation.

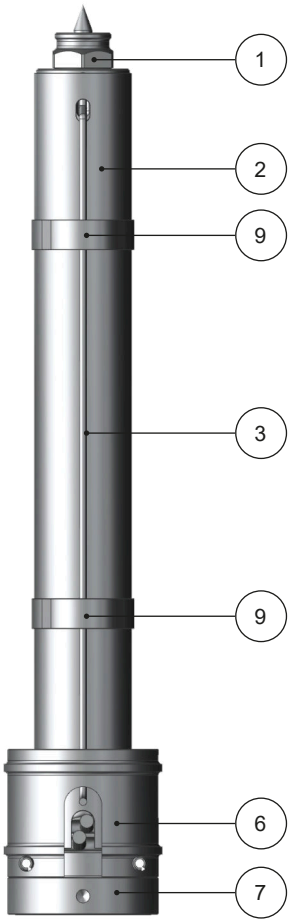

Figure 98: HPS III-S4.5 nozzle for standard installation

Pos. 1	Tip insert
Pos. 2	Protective tube
Pos. 3	Thermocouple
Pos. 6	Nozzle body
Pos. 7	Pressure tube
Pos. 9	Clamping sleeves

ATTENTION: All warnings and safety instructions listed in Chapter 7.1 must be read and understood before starting installation.

Recommended PPE,
see also Chapter 2.5.1:

Figure 99: Clamp the nozzle

1. Clamp the nozzle in the vice at the pressure tube (see "Fig. 88: (z352-03) Clamping of a deinstalled HPS III nozzle in a vice").

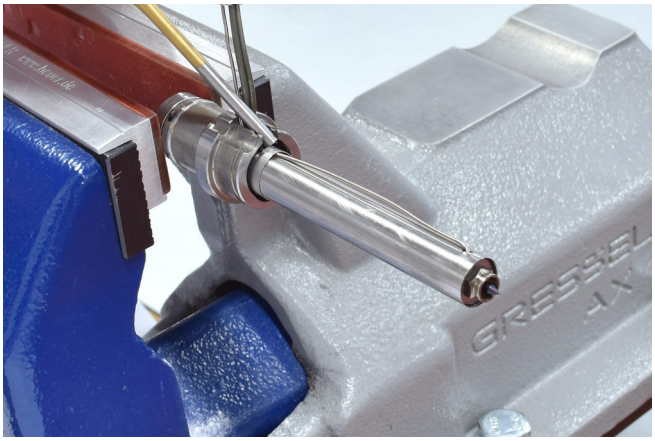

Figure 100: Pull off the clamping sleeves

2. Pull off the clamping sleeves carefully. **Attention! Nozzles for front installation have a clamping sleeve positioned under the nozzle body.** Push it out carefully by using a metal pin and pull it off.

Figure 101: Pull out the protective tube

3. Turn the protective tube and pull it out by 3-5 mm to release the locking of the thermocouple. If necessary apply WD 40 penetrating oil (see Chapter 5.3.1, "Tools and operating materials").

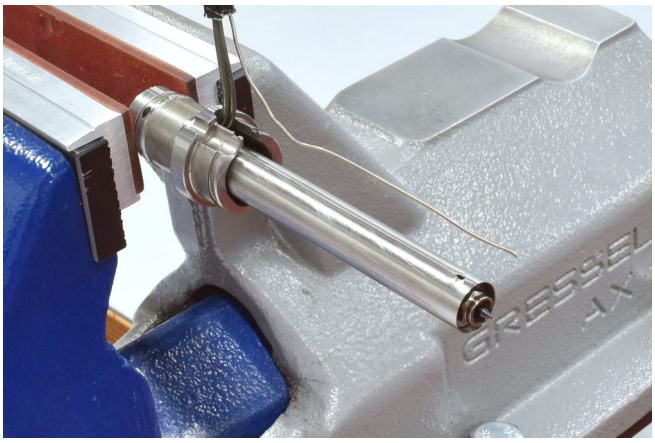

Figure 102: Disassemble the broken thermocouple

4. Pull broken thermocouple out of the bore in the nozzle and disassemble it.
5. Insert the new thermocouple by feeding it under the nozzle body until it reaches the front of the nozzle (only required for nozzles for standard installation).

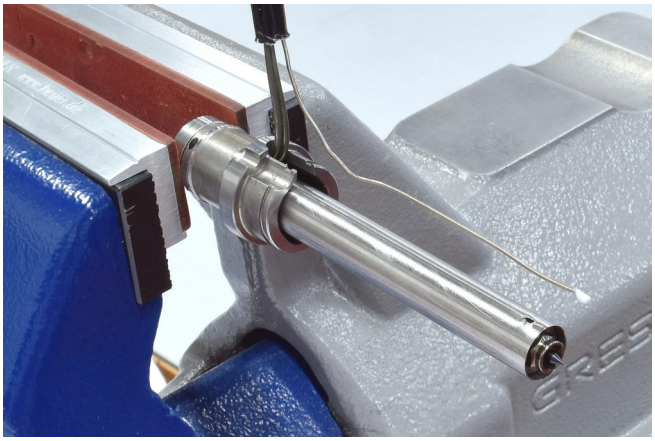

Figure 103: Coated tip of the thermocouple

6. Coat the tip of the new thermocouple with heat transferring paste (see Chapter 5.3.1, "Tools and operating materials") and insert it into the bore in the nozzle as far as it will go.

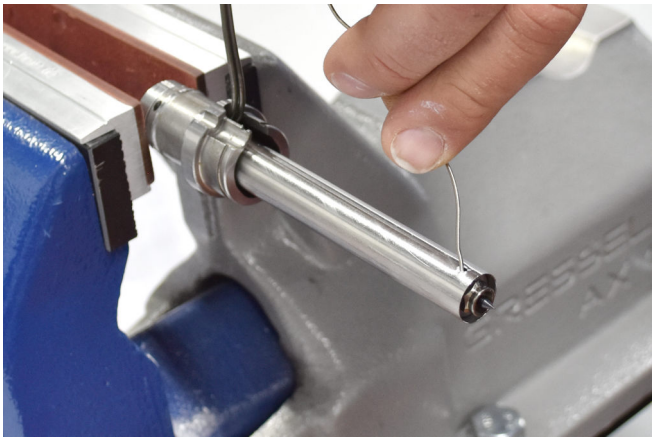

Figure 104: Installation of the new thermocouple

7. Slide the protecive tube carefully back as far as it will go to fix the new thermocouple in the bore.
8. Slide on the clamping sleeves. Front installation: Push the clamping sleeve carefully under the noozle body by using a metal pin.
9. Check functioning of the new thermocouple by heating up the nozzle with a controller.
10. For notes for installation of the nozzle please refer to Chapter 5.5, "Montage und Einbau".

7.6.4 HPS III-S6/9/12/18, pro SHOT 60/90 and HPS III-SXE 6/9/12 nozzles

WARNING

Check function of thermocouple

- Check resistance of thermocouple before and after installation to ensure that is has not be damaged during installation.

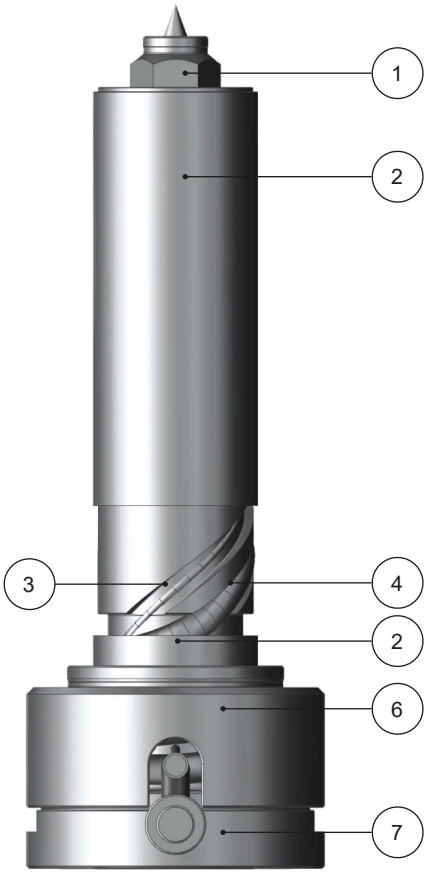

Figure 105: HPS III-S6 / pro SHOT 60 nozzle for standard installation

Pos. 1	Tip insert
Pos. 2	Protective tube
Pos. 3	Thermocouple
Pos. 4	Heater
Pos. 6	Nozzle body
Pos. 7	Pressure tube

ATTENTION: All warnings and safety instructions listed in Chapter 7.1 must be read and understood before starting installation.

Recommended PPE,
see also Chapter 2.5.1:

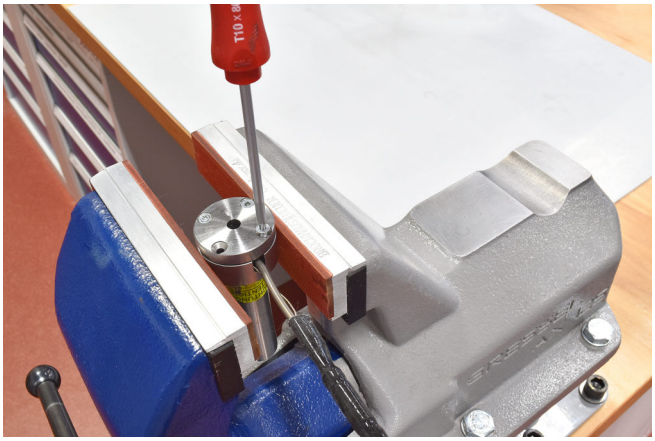

Figure 106: Clamp the nozzle and unscrew the flat head screws

NOTE

The thermocouple exchange for HPS III-SXE nozzles (6/9/12 mm) is carried out analogous to the thermocouple exchange for HPS III-S6/9/12/18 mm / pro SHOT (VG) 60/90 nozzles.

1. Clamp the nozzle in the vice at the nozzle body.

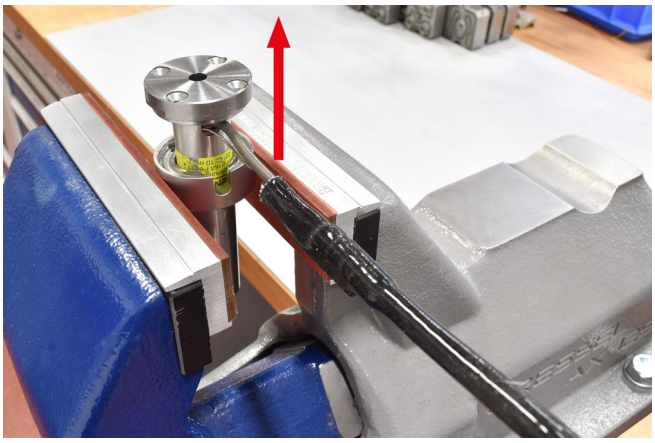

Figure 107: Pull out the pressure tube

2. Unscrew and remove the flat head screws (ISO 10642) of the nozzle body. Release the pressure tube carefully from the nozzle body and pull it out. **Attention! Check flat head screws for damage and replace them if necessary.**

NOTE

Flat head screws of the nozzle body

Flow channel diameter (mm)	Type of screw
6	M3 x 14 10.9
9	M3 x 14 10.9
12	M4 x 20 8.8
18	M4 x 16 12.9

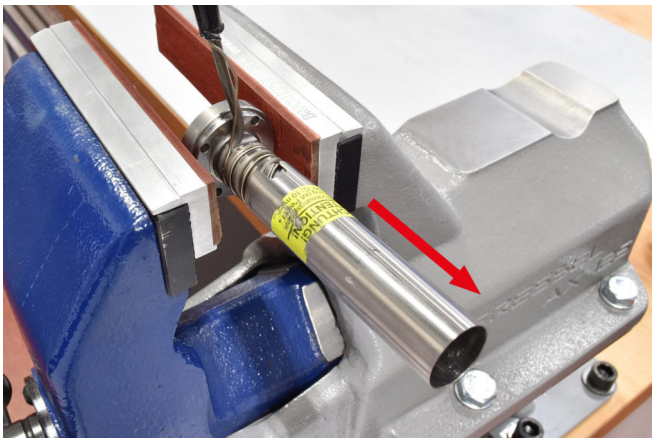

Figure 108: Pull off the protective tube

3. Clamp the nozzle in the vice at the pressure tube (see "Fig. 88: (z352-03) Clamping of a deinstalled HPS III nozzle in a vice").
4. Disassemble the protective tube. It may be necessary to use two screwdrivers as levers to untighten the protective tube. If necessary apply WD 40 penetrating oil (see Chapter 5.3.1, "Tools and operating materials") or heat moderately from the outside.

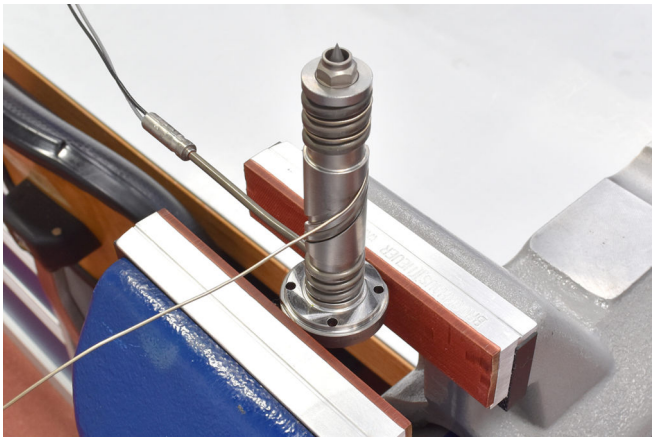

Figure 109: Disassemble the thermocouple

5. The nozzle heater and the thermocouple are connected by a protective hose and cable ties. Disconnect the thermocouple, disassemble the broken thermocouple from the cutout starting at the base of the pressure tube and pull it out of the bore in the nozzle.

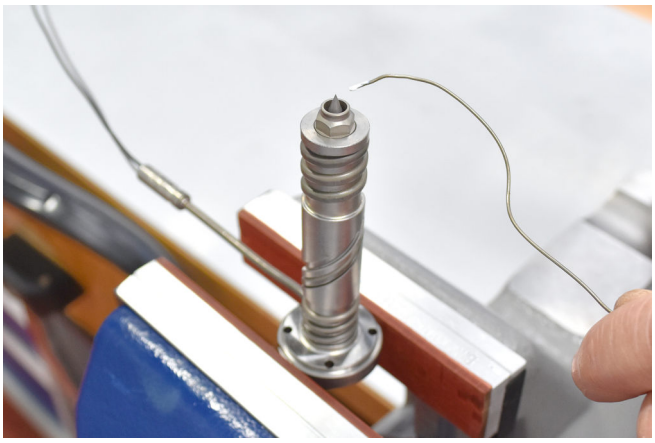

Figure 110: Coated tip of thermocouple

6. Coat the tip of the new thermocouple with heat transferring paste (see Chapter 5.3.1, "Tools and operating materials") and insert it into the bore in the nozzle as far as it will go.

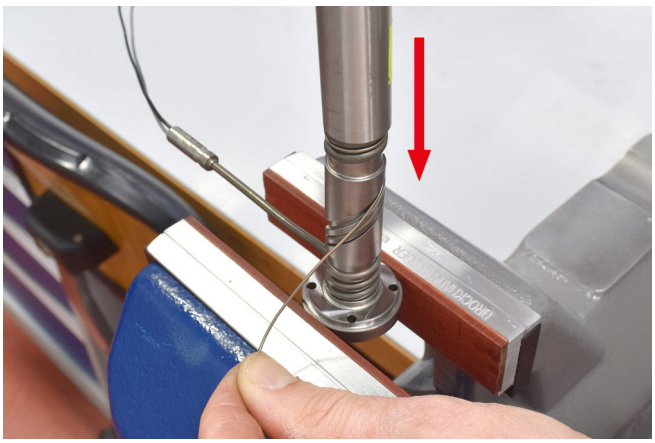

Figure 111: Installation of the new thermocouple

7. Bend the thermocouple carefully and wind it along the heater. At the same time slide the protective tube over the pressure tube to fix the already positioned part of the thermocouple.
8. Insert the pressure tube into the nozzle body. Screw in the flat head screws and tighten with matching torque (see see Chapter 9.1, "Tightening torques for socket head screws").
9. Check functioning of the new thermocouple by heating up the nozzle with a controller.
10. For notes for installation of the nozzle please refer to Chapter 5.5, "Montage und Einbau" .

7.7 Deinstallation / exchange of valve pins

7.7.1 Drive units with pistons - deinstallation und exchange of valve pins

WARNING

Pressurized systems

All hydraulic or pneumatic supply lines must be depressurised during installation.

- Injuries caused by flying parts or “whipping” hoses.
- Injuries to eyes caused by escaping pressurised liquids.

WARNING

Hot surfaces

Burns to the body caused by hot surfaces.

The procedure for deinstallation of the valve pin as described in the following is valid for the following drive unit versions:

- Drive unit integrated in clamping plate (version 1)
- Drive unit integrated in clamping plate (version 2)
- Drive unit placed on manifold (coupled)
- Drive unit placed on manifold (screwed-on) (version 1)
- Drive unit placed on manifold (screwed-on) (version 2)

The example shows a drive unit integrated in the clamping plate.

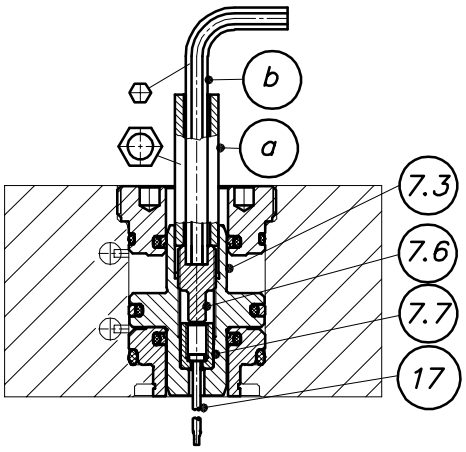

Figure 112: (z342-21) Dismantling of screw by using a tubular hexagon spanner

ATTENTION: All warnings and safety instructions listed in Chapter 7.1 must be read and understood before starting installation.

Recommended PPE,
see also Chapter 2.5.1:

1. Switch on the mould cooling and heat up the hot runner system to processing temperature.
2. Insert tubular hexagon spanner (pos. a, see Chapter 5.3.1, "Tools and operating materials") into the hexagonal cutout in the piston (pos. 7.3) and hold it in position by using a wrench to avoid rotation of the piston.
3. Insert the allen key (pos. b, see Chapter 5.3.1, "Tools and operating materials") through the tubular hexagon spanner to unscrew and to dismantle the screw (pos. 7.6).

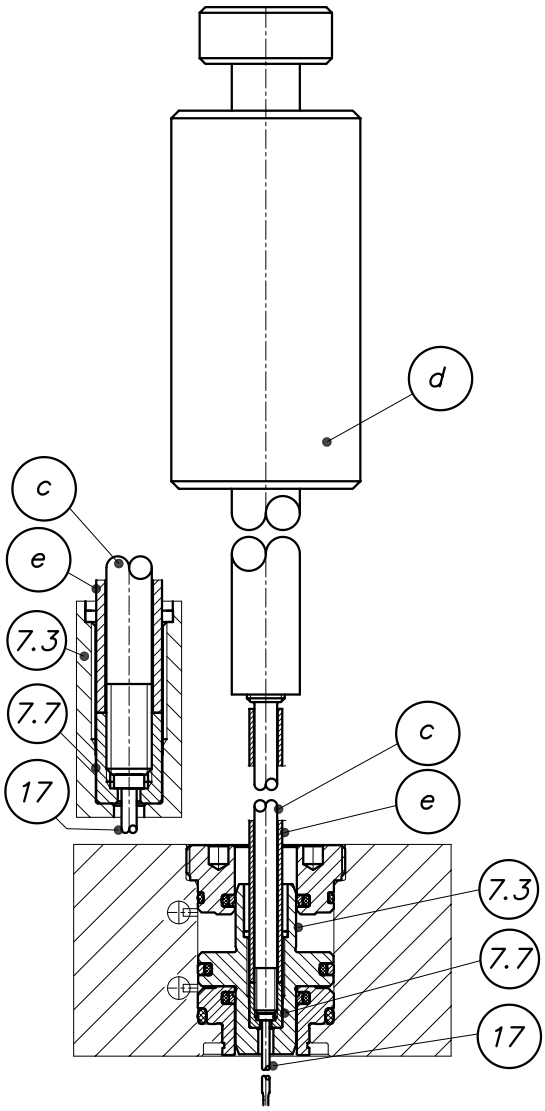

Figure 113: (z342-22) Screw in threaded rod to disassemble valve pin retainer and valve pin

4. After unscrewing the screw the valve pin retainer (pos. 7.7) becomes visible. Screw a threaded rod (pos. c, see Chapter 5.3.1, "Tools and operating materials") into the valve pin retainer and connect it with a striking weight (pos. d, see Chapter 5.3.1, "Tools and operating materials").
5. Use the striking weight to untighten the valve pin retainer. Then pull out the valve pin retainer with valve pin (pos. 17) carefully and without tilting.
6. Replace the valve pin with the new one.
7. Screw the threaded rod into the valve pin retainer again.
8. Insert the new valve pin carefully and without tilting. Apply axial load only. Tilting or bending caused by lateral load must be avoided. Slowly push the valve pin through the manifold and the valve pin guide in the tip insert of the nozzle until the valve pin retainer sits at the bottom of the drive unit.
9. Slide the disassembly sleeve (pos. e, see Chapter 5.3.1, "Tools and operating materials") over the threaded rod (pos. c) and use it to fix the valve pin retainer with gentle pressure. Unscrew the threaded rod and remove the disassembly sleeve.
10. Screw the screw (pos. 7.6) in again by using the allen key (pos. b, see Chapter 5.3.1, "Tools and operating materials") and the tubular hexagon spanner (pos a, see Chapter 5.3.1, "Tools and operating materials"). Tighten with matching torque. See Chapter 9.4, "Tightening torques for screws to fix the valve pin in the valve pin retainer".

7.7.2 Electric drive unit with step motor – deinstallation and exchange of valve pins

WARNING

Hot surfaces

Burns to the body caused by hot surfaces.

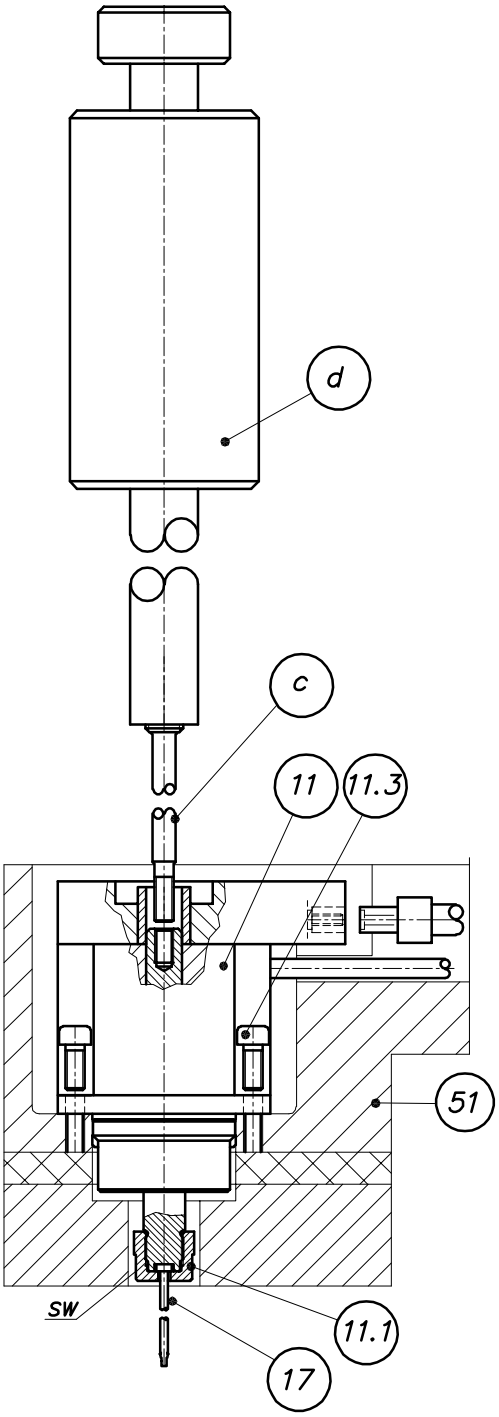

Figure 114: (z342-20) Deinstallation of valve pin

ATTENTION: All warnings and safety instructions listed in Chapter 7.1 must be read and understood before starting installation.

Recommended PPE,
see also Chapter 2.5.1:

1. Disconnect the wiring of the drive unit.
2. Heat up the hot runner system to processing temperature.
3. Unscrew the socket head screws (pos. 11.3) of the electric drive unit. Screw a threaded rod (pos. c, see Chapter 5.3.1, "Tools and operating materials") with striking weight (pos. d, see Chapter 5.3.1, "Tools and operating materials") into the thread at the backside of the drive unit to to dismantle the drive unit from the clamping plate (pos. 51). Then pull out the drive unit (pos. 11) with valve pin retainer and valve pin carefully and without tilting.
4. Unscrew the valve pin retainer (pos. 11.1) with valve pin (pos. 17) from the drive unit (pos. 11) by using a wrench.
5. Pull the valve pin carefully out the valve pin retainer.
6. For installation of the new valve pin and the drive unit please see Chapter 5.5.11, "Electric drive unit with step motor" beschrieben.

7.7.3 Electric drive unit with servo motor – deinstallation and exchange of valve pins

WARNING

Hot surfaces

Burns to the body caused by hot surfaces.

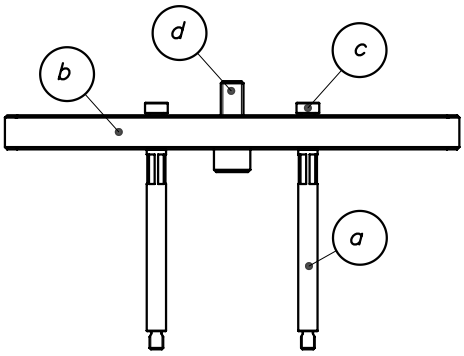

Figure 115: (z342-29) Disassembly device servo motor

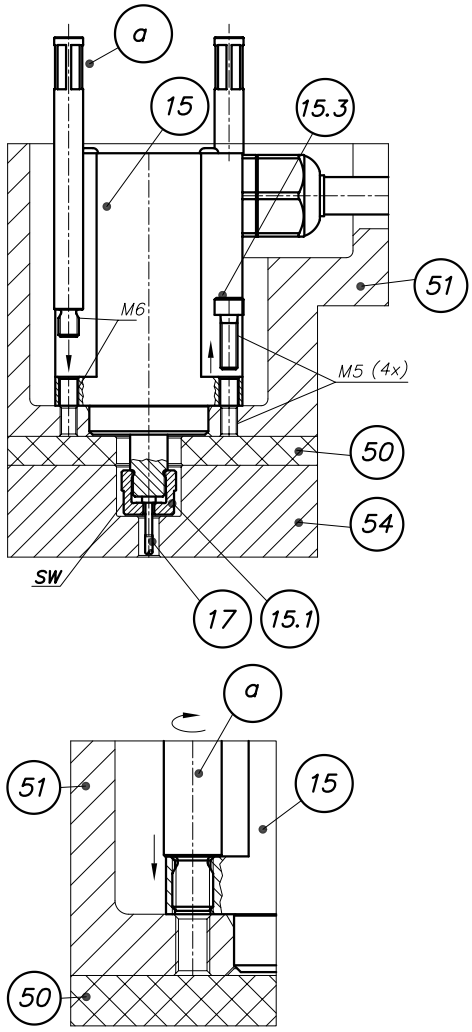

Figure 116: (z342-30) Screw in the bolts of the disassembly device

ATTENTION: All warnings and safety instructions listed in Chapter 7.1 must be read and understood before starting installation.

Recommended PPE,
see also Chapter 2.5.1:

1. Disconnect the plug connection of the drive unit.
2. Heat up the hot runner system to processing temperature.
3. Unscrew and remove the socket head screws (item 15.3) of the electric drive unit.
4. Screw the two bolts (pos. a) of the disassembly device T00543 (pos. b, see Chapter 5.3.1, "Tools and operating materials") into the servo motor housing at diagonally opposite positions and tighten hand-tight using an SW8 spanner. (see Fig. 116 and Fig. 117).

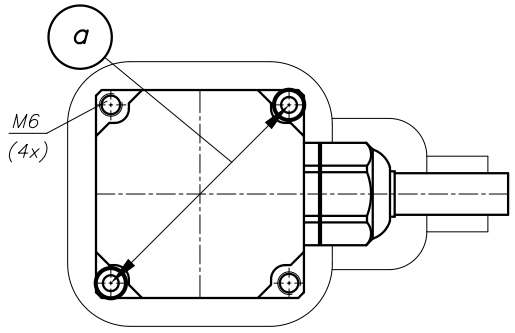

Figure 117: (z342-31) Screw in bolts diagonally

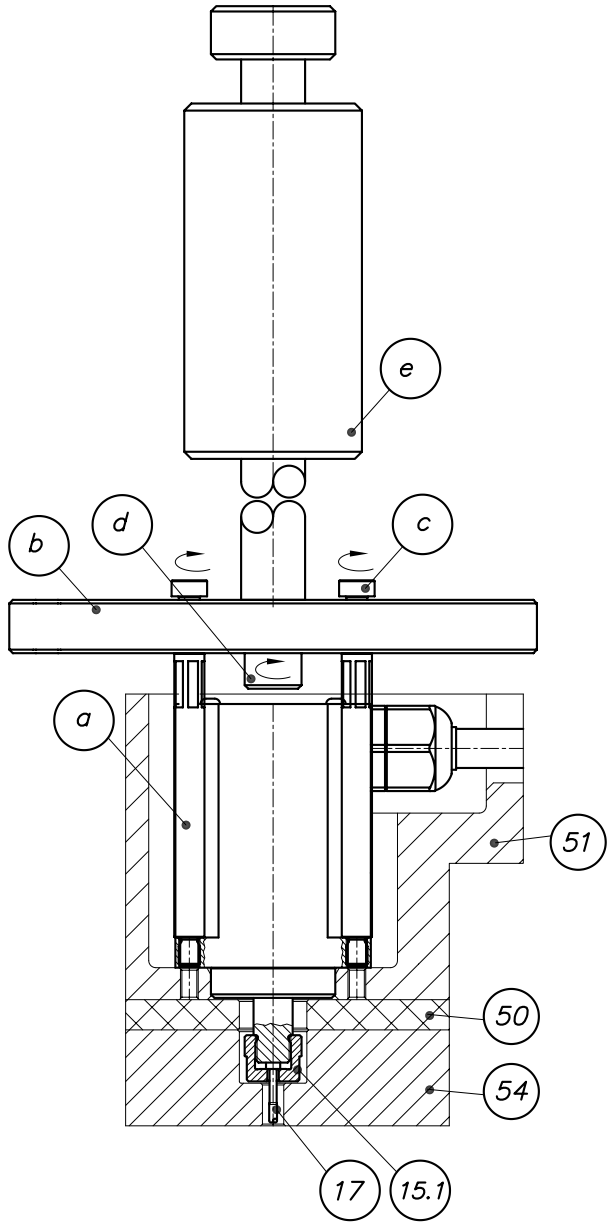

Figure 118: (z342-32) Screw on the disassembly device, loosen with striking weight

5. Screw the disassembly device to the bolts using the two corresponding shoulder fitting screws (pos. c) and tighten hand-tight. Position the M10 cylinder screw (pos. d) in the centre above the servo motor (Fig. 118).
6. Attach an striking weight (pos. e, see Chapter 5.3.1, "Tools and operating materials") to the socket head screw M10 and loosen the drive unit from the clamping plate with even, straight strikes without tilting it. (Fig. 118)
7. Carefully pull out the drive unit including valve pin holder (item 15.1) and valve pin (item 17) upwards without tilting.
8. Unscrew the valve pin holder with inserted valve pin from the drive unit using a spanner.
9. Carefully pull the old valve pin out of the valve pin holder.
10. Install the new valve pin and the electric drive unit as described in Chapter 5.5.12, "Electric drive unit with servo motor ".

7.8 Exchange of a sealing kit for drive units integrated in the clamping plate

WARNING

Pressurized systems

All hydraulic or pneumatic supply lines must be depressurised during installation.

- Injuries caused by flying parts or “whipping” hoses.
- Injuries to eyes caused by escaping pressurised liquids.

NOTE

The appropriate sealing kit for the respective drive is required. When mounting/dismounting the sealing kits, ensure that they are clean and undamaged. The O-rings of the seals must not be fitted twisted. Do not use the seals if they are damaged, e.g. cracked, chipped or pinched. When using a toggle press, the manufacturer's application and safety instructions must be observed.

The replacement of the sealing kits described below is valid for the following drive versions:

- Drive unit integrated in clamping plate (version 1)
- Drive unit integrated in clamping plate (version 2)

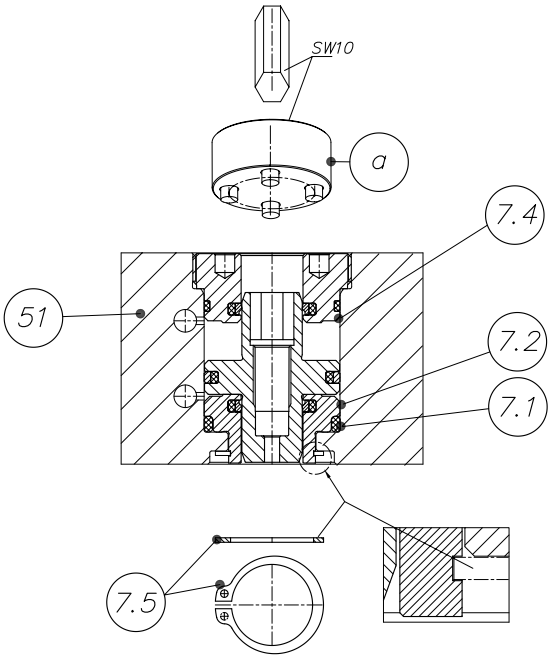

Figure 119: (z402-01) Integrated drive unit (version 1)

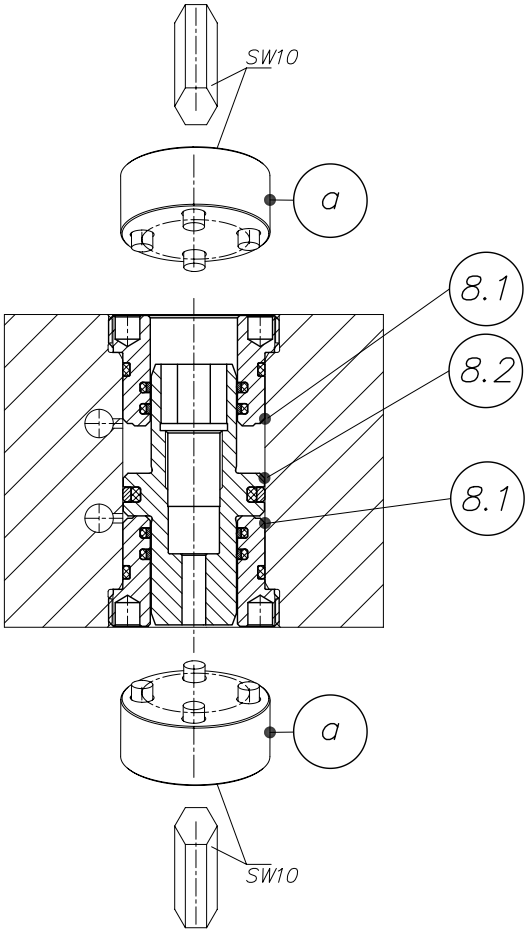

Figure 120: (z402-02) Integrated drive unit (version 2)

Pos. 7.1	O-ring
Pos. 7.2	Housing bottom
Pos. 7.3	Piston
Pos. 7.4	Screw-in housing cover
Pos. 7.5	Circlip
Pos. 51	Clamping plate
Pos. a	Installation wrench

Pos. 8.1	Screw-in housing cover
Pos. 8.2	Piston
Pos. 51	Clamping plate
Pos. a	Installation wrench

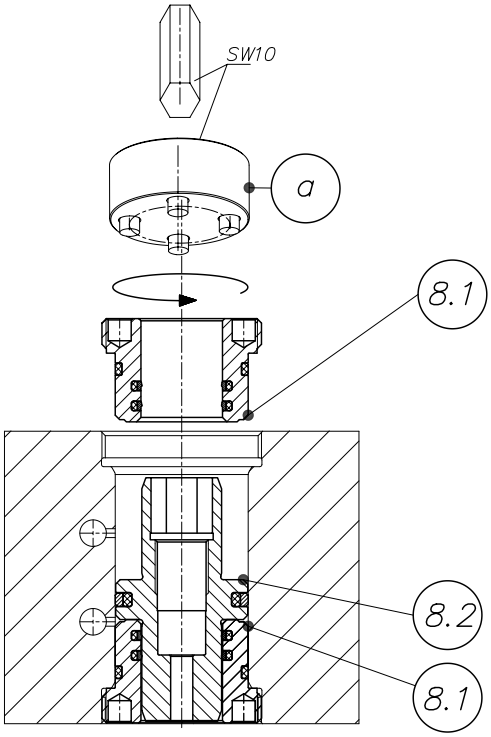

Figure 121: (z402-03) Disassembly of the upper screw-in housing cover

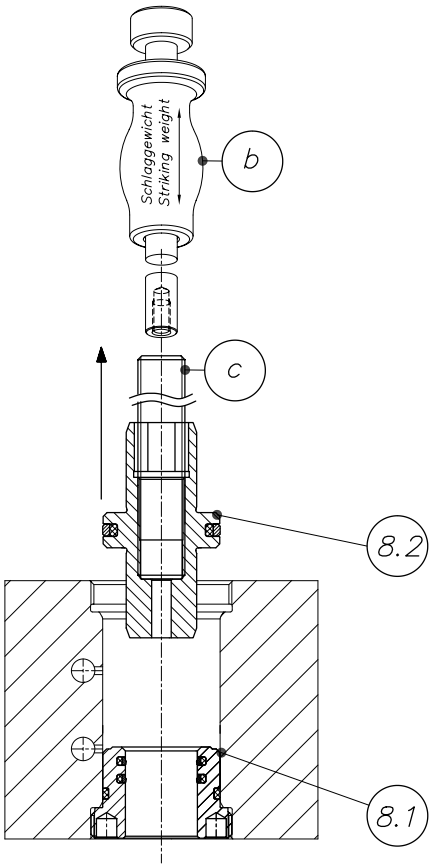

Figure 122: (z402-04) Screw the threaded rod into the piston

ATTENTION: All warnings and safety instructions listed in Chapter 7.1 must be read and understood before starting installation.

Recommended PPE,
see also Chapter 2.5.1:

The example shows a drive unit of version 2

1. Remove the valve pin (see see Chapter 7.7.1, "Drive units with pistons - deinstallation und exchange of valve pins").
2. After the valve pin has been removed, switch off the system and allow it to cool down to room temperature with the cooling system still switched on.
3. Disassemble the clamping plate, set it up on edge and secure it against falling over using a suitable crane!
4. Unscrew and remove the upper screw-in housing cover from the clamping plate using the installation wrench (pos. a).
5. Screw the threaded rod (pos. c) into the piston and carefully pull it out of the clamping plate using an impact weight (pos. b).

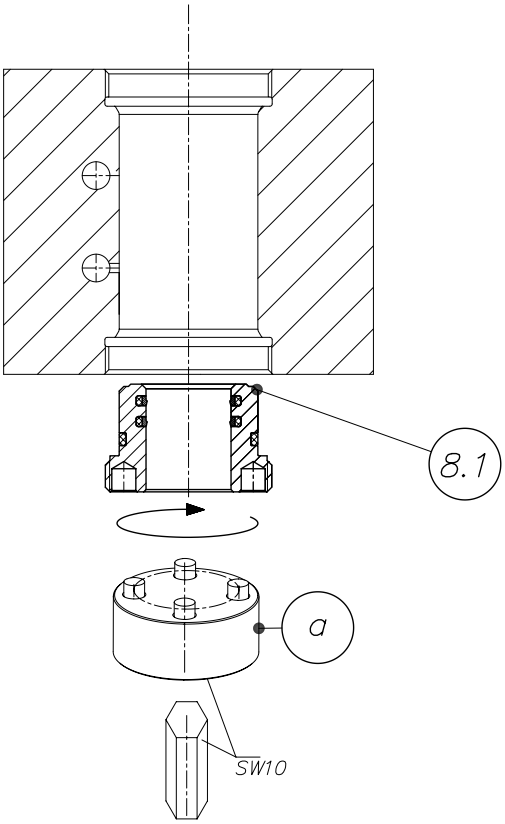

Figure 123: (z402-05) Disassembly of lower screw-in housing cover ver. 2

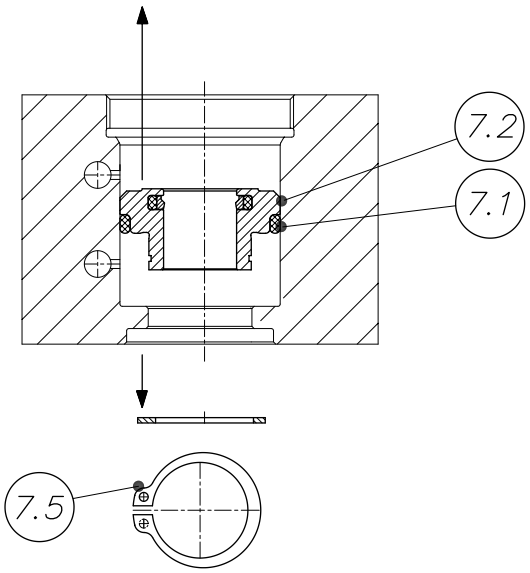

Figure 124: (z402-06) Disassembly of housing bottom ver. 1

6. Loosen and unscrew the lower screw-in housing cover (pos. 8.1) using the installation wrench (pos. a) (see Fig. 123).
   Bei Variante 1: Remove the retaining ring (pos. 7.5, DIN 471), remove the screw-in housing bottom (pos. 7.2) and O-ring (pos. 7.1) (see Fig. 124).
7. Use a suitable disassembly tool to remove the seals from the piston and screw-in housing covers or housing bottom. Avoid damaging the pistons and the screw-in housing covers.
8. Clean the piston and the screw-in housing cover and check them for damage.

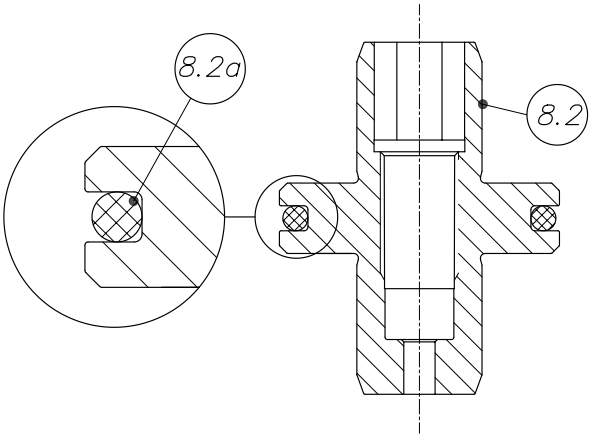

Figure 125: (z402-07) Pull the O-ring onto the piston

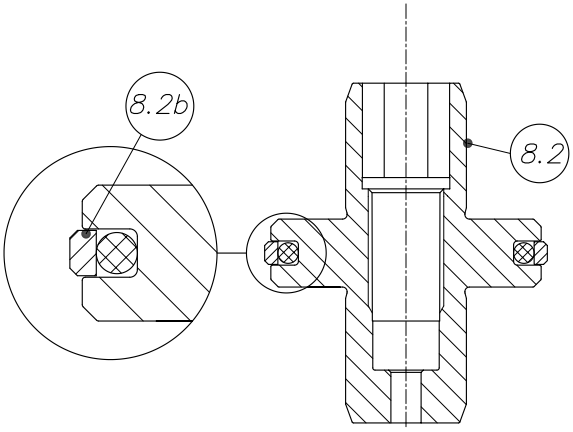

Figure 126: (z402-08) Push the sliding ring onto the supporting ring

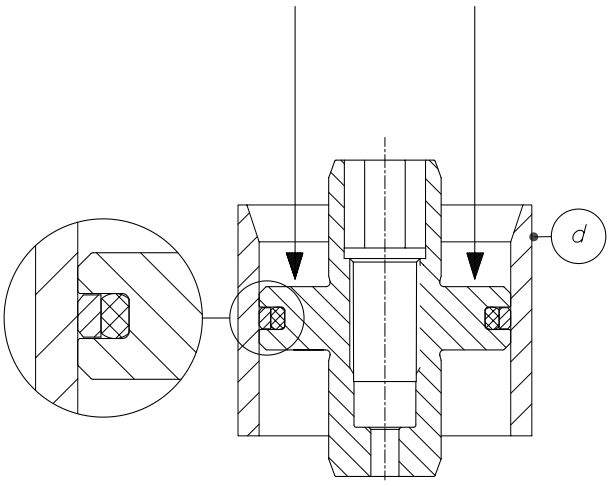

Figure 127: (z402-09) Calibrate the seals

9. Pull the supporting ring (O-ring, pos. 8.2a) of the piston sealing onto the piston (pos. 8.2). Avoid twisting and overstretching the O-ring (see Fig. 125). Then push the sliding ring (pos. 8.2b) onto the supporting ring (note the orientation, see Fig. 126).
10. Now calibrate the sealing package using the calibration bushing (pos. d). To do this, insert the piston into the insertion bevel of the calibration bushing and push it slowly and evenly through the calibration bushing (see Fig. 127).

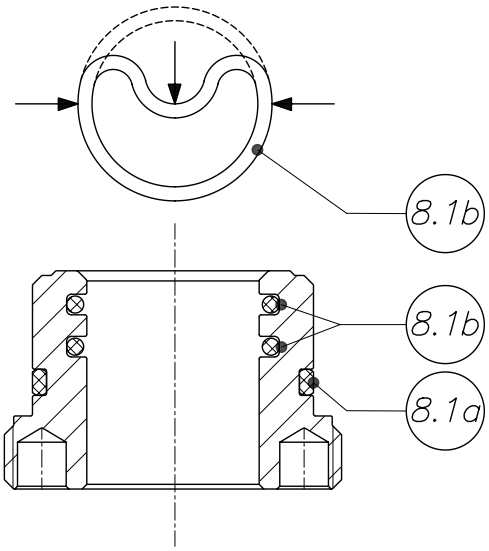

Figure 128: (z402-10) Shape the rod sealing into a ‘kidney’ shape

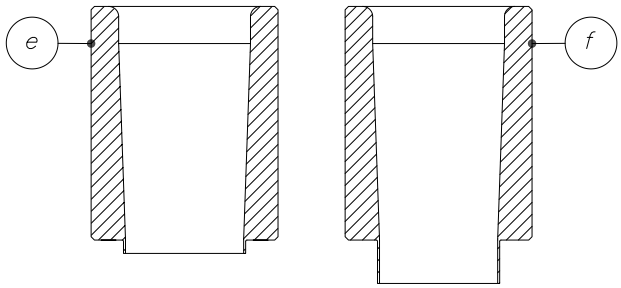

Figure 129: (z402-13) Versions of the insertion bushing

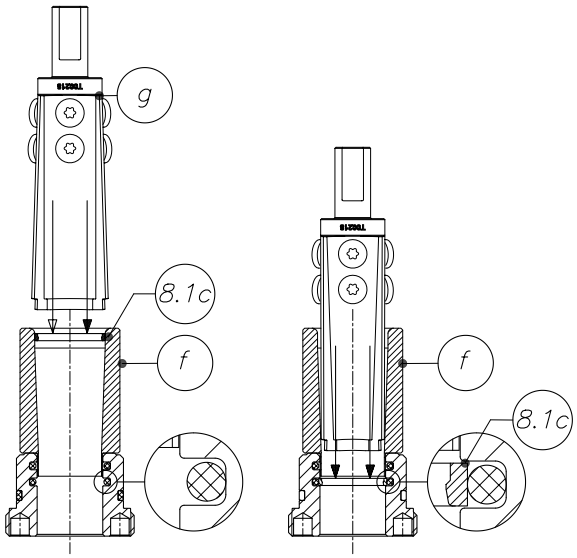

Figure 130: (z402-11) Insert the sliding ring with the press-in mandrel

11. Fit the outer sealing rings (pos. 8.1a) of the lower and upper screw-in housing covers. (for **version 1**, upper cover only).
12. Insert the supporting rings (pos. 8.1b) of the rod sealing. To do this, shape them into a ‘kidney’ by hand and insert them into the grooves provided in the screw-in housing cover or housing bottom (version 1) (see Fig. 128). **Attention:** Hydraulic drive units have 2 sealing packages per screw-in housing cover. The example shows the installation of a hydraulic drive unit. Step 13 is not necessary for a pneumatic drive unit with only one sealing package.
13. Place the insertion bushing with long collar (pos. f) on the screw-in housing cover and push in the lower sliding ring (pos. 8.1c) with the press-in mandrel (item g). **Attention:** Observe the orientation of the sliding ring (see Fig. 130).

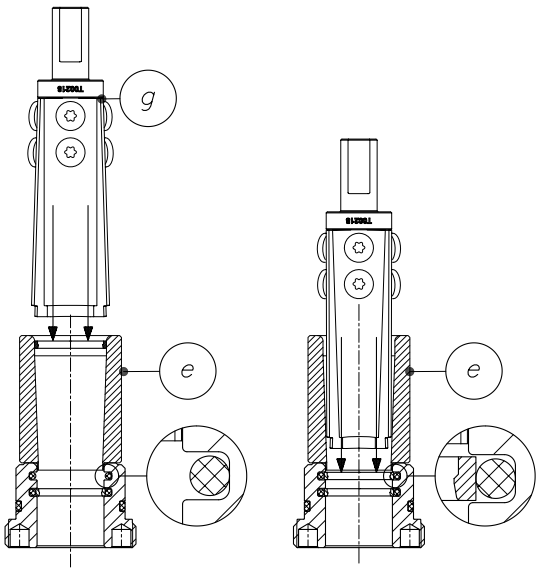

Figure 131: (z402-12) Insert sliding ring

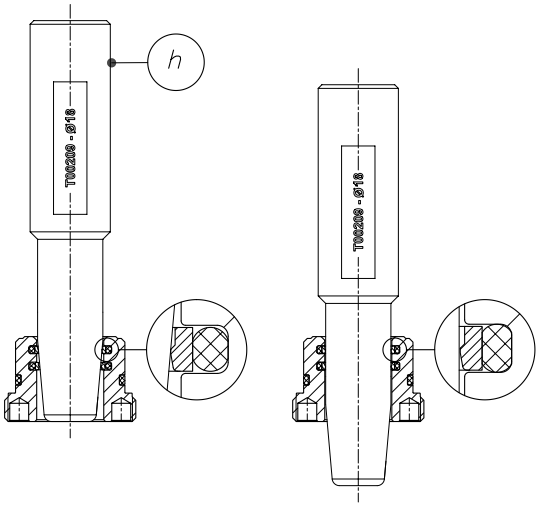

Figure 132: (z402-14) Calibrate inner sealings

14. Place the insertion bushing with short collar (pos. e) on the screw-in housing cover or housing bottom (version 1) and push in the upper sliding ring with the press-in mandrel (pos. g). **Attention:** Note the orientation of the sliding ring (see Fig. 131).
15. In both cases, carefully push the sliding ring through the respective insertion bushing using the press-in mandrel until it noticeably snaps back into the groove. Ensure that it is pushed in straight and does not tilt.
16. EWIKON recommends the use of a commercially available toggle press for installation with a press-in mandrel. If a press is not available, EWIKON offers a handle to hold the press-in mandrel. This makes it possible to fit the sliding ring ‘by hand’ (see Chapter 5.3.1, "Tools and operating materials").
17. Then calibrate the inner seals with the calibration mandrel (pos. h, see Fig. 132). To do this, insert it slowly and evenly into the screw-in housing cover or housing bottom (version 1) and pull it out again.
18. The drive unit is installed as described in chapters 5.5.5 "Drive unit integrated in clamping plate (version 1) ", 5.5.6 "Drive unit integrated in clamping plate (version 2) - Installation in the clamping plate" and 5.5.10 "Installation of valve pin". **Attention:** For drive units of **version 1**, ensure that the O-ring under the housing bottom is also replaced.

7.9 Lubrication of electric servo drives for synchronous plate systems with pull & rail mechanism

WARNING

Hot surfaces

Burns to the body caused by hot surfaces.

NOTE

Wear tight-fitting safety glasses and protective gloves made of nitrile rubber (class 1) when using the grease.

- H319 – Causes severe eye irritation
- P264 – Wash hands thoroughly after use
- P280 – Wear eye/face protection

For further information, please refer to the manufacturer's current safety data sheet.

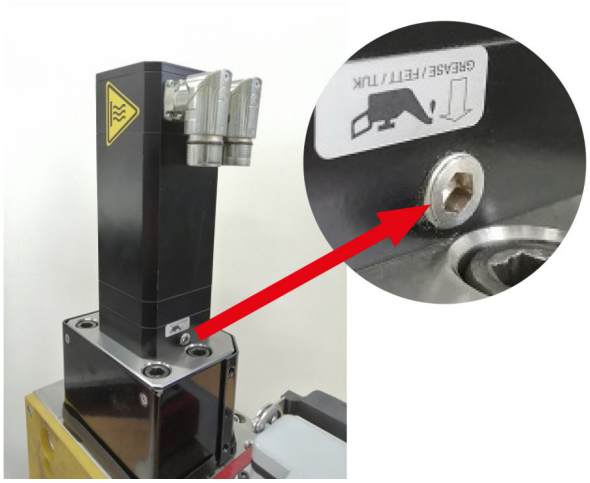

Figure 133: Servo drive unit

Figure 134: Threaded hole for lubrication of the servo drive

ATTENTION: All warnings and safety instructions listed in Chapter 7.1 must be read and understood before starting installation.

Recommended PPE,
see also Chapter 2.5.1:

1. Sufficient lubrication of the ball screw has to be ensured in order to guarantee a high lifetime. The lubrication intervals and quantity depend on the operating and ambient conditions. The required amount of grease is approx. 1-3 cm³ of “Klüberfood NH1 94-301” grease per month (500 - 700 operating hours) injected within short intervals.
2. Disassemble the socket screw (see Fig. 133) with a suitable allen key so that the threaded hole (see Fig. 134) is freely accessible.

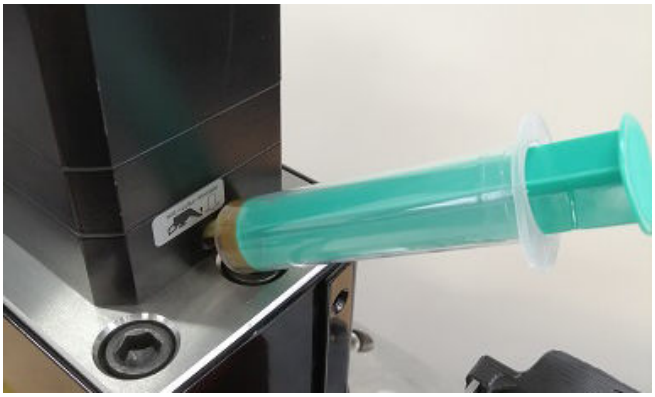

Figure 135: Lubrication of the servo drive through the threaded hole

3. It has to be guaranteed that the grease gets onto the ball screw. Therefore inject the grease into the threaded hole using a tube or a syringe (see Fig. 135).
4. After maintenance work has been completed, screw the socket screw back in flush as a dirt protection.

7.10 Instructions for service and repair

- Only genuine spare parts must be used.
- When ordering spare parts please use the specifications given in the spare-parts lists.
- In case of service requests please always have the serial number, order number and type of the used hot runner system ready.

Service

- www.ewikon.com
- service@ewikon.com

8 Decommissioning

8.1 Safety instructions

DANGER

Installation with activated voltage supply

Risk of death by electric shock and severe injuries caused by live components.

- During all installation steps that do not require heating, the hot runner components and the injection mould must be disconnected from the power source.

WARNING

Hot surfaces / hot material (plastic melt)

- Body burns by hot surfaces.
- Let the HPS III hot runner system and all components cool down completely to ambient temperature before starting maintenance work / disassembling. Never touch material leaking from the nozzle/the mould/the hot runner or the material inlet. Even material that seems to be cooled down already may still be hot inside the core and cause burns.
- Please make sure you wear your personal protective equipment (PPE).

Recommended PPE, see also Chapter 2.5.1:

WARNING

Escape of hydraulic liquid and pressurised air

Risk of injuries.

- All hydraulic or pneumatic supply lines must be depressurised.

NOTE

- All operating materials and fluids must be emptied, collected and disposed in accordance with the local regulations.
- Follow the safety instructions for transport with lifting accessories (see Chapter 5.1, "Transport").
- Only specialised staff is allowed to carry out any deinstallation work.

8.2 Instructions for disposal

NOTE

Once disposed components must not be used again. EWIKON disclaims any responsibility for personal injuries and material demage resulting from re-use.

In case that no special arrangements regarding return or disposal were agreed with EWIKON the disassembled components have to be recycled after deinstallation:

- Scrap metallic materials.
- Recycle plastic components and plastic waste from the production.
- Dispose the remaining components sorted by their material properties.
- Electronic scrap and electronic components are special waste and must be disposed by authorised specialised companies only.
- With regard to the environmentally sound disposal of the deinstalled HPS III hot runner system the local regulations for waste disposal must be observed.

9 Tightening torques

9.1 Tightening torques for socket head screws

- Tighten socket head screws with the matching torques according to the following chart. All values are non-binding standard values for socket head screws with internal hexagon and standard metric thread complying with DIN EN ISO 4762.

All values were determined in accordance with the guideline VDI 2230 sheet 1:2014-12 which is based on the most frequently used torque controlled tightening method with normally 90% utilisation of the minimum yield strength $R_{p0,2}$. The values given are valid for socket head screws with property class 8.8, 10.9 and 12.9 with internal hexagon and standard metric thread complying with DIN EN ISO 4762 (replacement for DIN 912).

- The values are valid for clearance holes with tolerance “medium” complying with DIN EN 20273.
- The values are to be understood as maximum permissible tightening torques (without safety factor).
- Only calibrated tightening tools must be used. (When the tightening method/ the tightening tool shows a greater variation (approx. > ±5%) the required tightening torque MA must be appropriately reduced to avoid overstressing (control test required). It must be considered that different tightening methods can show a different variation.)
- EWIKON generally recommends to use screws with property class 12.9 only.

Thread	Lead	Width across flats AW	Property class	Maximum permissible tightening torque MA at room temperature			
				Lubricated (High temperature installation paste, see Chapter 5.3.1, "Tools and operating materials") μ_G=0.10		Screws in as-delivered condition (slightly oiled) μ_G=0.14	
				M_A [Nm]	M_A [ft·lb]	M_A [Nm]	M_A [ft·lb]
M3	0.5	2.5	8.8	1.12	0.83	1.41	1.04
			10.9	1.58	1.17	1.98	1.46
			12.9	**1.90**	**1.40**	**2.37**	**1.75**
M4	0.7	3	8.8	2.6	1.9	3.3	2.4
			10.9	3.9	2.9	4.8	3.5
			12.9	**4.5**	**3.3**	**5.6**	**4.1**
M5	0.8	4	8.8	5.2	3.8	6.5	4.8
			10.9	7.6	5.6	9.5	7.0
			12.9	**8.9**	**6.6**	**11.2**	**8.3**
M6	1.0	5	8.8	9.0	6.6	11.3	8.3
			10.9	13.2	9.7	16.5	12.2
			12.9	**15.4**	**11.4**	**19.3**	**14.2**
M7	1.0	6	8.8	14.8	10.9	18.7	13.8
			10.9	21.7	16.0	27.5	20.3
			12.9	**25.4**	**18.7**	**32.2**	**23.7**
M8	1.3	6	8.8	21.6	15.9	27.3	20.1
			10.9	31.8	23.5	40.1	29.6
			12.9	**37.2**	**27.4**	**46.9**	**34.6**

Thread	Lead	Width across flats AW	Property class	Maximum permissible tightening torque MA at room temperature			
				Lubricated (High temperature installation paste, see Chapter 5.3.1, "Tools and operating materials", μ_G=0.10		Screws in as-delivered condition (slightly oiled) μ_G=0.14	
				M_A [Nm]	M_A [ft·lb]	M_A [Nm]	M_A [ft·lb]
M10	1.5	8	8.8	43	32	54	40
			10.9	63	46	79	58
			12.9	**73**	**54**	**93**	**69**
M12	1.8	10	8.8	73	54	93	69
			10.9	108	80	137	101
			12.9	**126**	**93**	**160**	**118**
M14	2.0	12	8.8	117	86	148	109
			10.9	172	127	218	161
			12.9	**201**	**148**	**255**	**188**
M16	2.0	14	8.8	180	133	230	170
			10.9	264	195	338	249
			12.9	**309**	**228**	**395**	**291**
M18	2.5	14	8.8	259	191	329	243
			10.9	369	272	469	346
			12.9	**432**	**319**	**549**	**405**
M20	2.5	17	8.8	363	268	464	342
			10.9	517	381	661	488
			12.9	**605**	**446**	**773**	**570**
M22	2.5	17	8.8	495	365	634	468
			10.9	704	519	904	667
			12.9	**824**	**608**	**1057**	**780**
M24	3.0	19	8.8	625	461	798	589
			10.9	890	656	1136	838
			12.9	**1041**	**768**	**1329**	**980**

Table 17: Tightening torques for socket head screws with standard metric thread according to DIN EN ISO 4762

9.2 Tightening torques for manifold screw connections and retaining screws

Thread	Tightening torque Lubricated (high temperature installation paste, see Chapter 5.3.1, "Tools and operating materials")	
	M_A [Nm]	M_A [ft·lb]
M4	1.5	1.1
M5	5	3.7
M8	10	7.4

Table 18: Tightening torques for manifold screw connections (for standard installation of nozzles) and retaining screws

9.3 Tightening torques for tip inserts

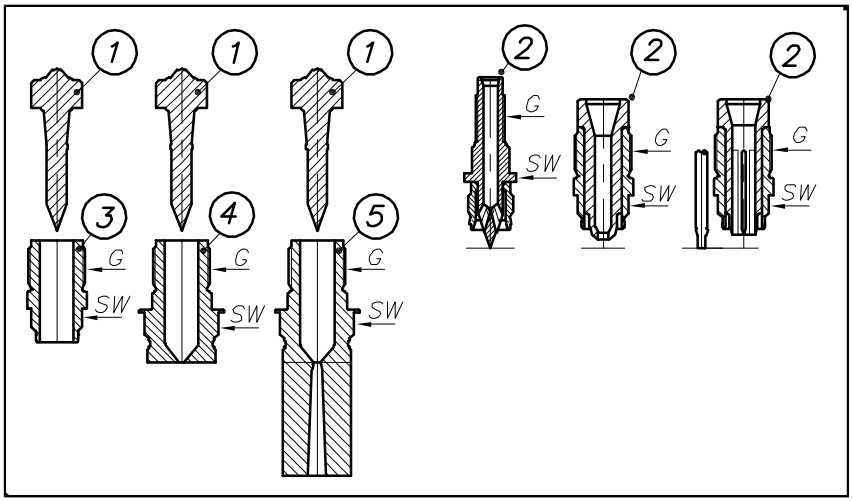

1	Tip insert	5	Extended screw-on gate bush
2	Tip insert including nosepiece (one-piece)	G	Thread
3	Nosepiece	SW	Width across flats
4	Screw-on gate bush		

NOTE

Please pay attention to the notes in Chapter 5, "Installation" and Chapter 7, "Maintenance".
The threads (G) of the tip inserts must be coated with high temperature installation paste (see Chapter 5.3.1, "Tools and operating materials"). Installation temperature 220°C. Beim Non-standard tip inserts may require tightening torques which differ from the values given here. In case of doubt always contact EWIKON.

Flow channel Ø of nozzle	3 mm	4,5 mm	6 mm	9 mm	12 mm	18 mm
Thread G	M5x0.5	M7x0.5	M10x0.75	M13x0.75	M16x0.75	M24x1.0
Nosepiece	SW8	SW8	SW9	SW12	SW16	SW24
Screw-on gate bush	SW8	SW11	SW13	SW17	SW24	SW27
HPS III-S	95158... 95159...	95218... 95219...	95258-V01... 95259-V01...	95308-V01... 95309-V01...	95408-V01... 95409-V01...	95538...
pro SHOT	-	-	9SO060F-V01... 9SO060S-V01...	-	-	-
HPS III-SXE	-	-	9EO060-V01... 93259...	93309...	93409...	93539...
HPS III-NVE	NV95158... NV95159...	NV95218... NV95219...	NV95258-V01... NV95259-V01...	NV95308-V01... NV95309-V01...	NV95408-V01... NV95309-V01...	NV95538...
pro SHOT VG	-	-	9SV060F-V01... 9SV060S-V01...	-	-	-
HPS III-NVI	-	-	EN306...L	EN309...L	EN312...L EN312...H	EN218...L EN218...H
HPS III-L2X	-	-	95063....	95093....	95123....	95182....
HPS III-L2X-NV	-	-	NV95063...	NV95093...	NV95123...	NV95218...
HPS III-MV	95...-3 95...-4 93...-3	-	-	-	-	-
Tightening torque [Nm]	**3.5**	**3.5**	**13**	**30**	**50**	**100**
Tightening torque [ft·lb]	**2.6**	**2.6**	**9.6**	**22.1**	**36.9**	**73.8**

Table 19: Anziehdrehmomente für Düsenspitzen

9.4 Tightening torques for screws to fix the valve pin in the valve pin retainer

Valve pin diameter Ø [mm	Thread (screw)	Tightening torque	
		M_A [Nm]	M_A [ft·lb]
1,5	M10x1	5	3,7
2	M8x1	4	3,0
	M10x1	5	3,7
	M12x1	7	5,2
3	M10x1	5	3,7
	M12x1	7	5,2
	M13x1	7	5,2
	M14x1	8	5,9
4	M14x1	8	5,9
	M18x1	11	8,1
5	M18x1	11	8,1
6	M18x1	11	8,1
	M19x1	12	8,9
8	M18x1	11	8,1
	M19x1	12	8,9

Table 20: Tightening torques for screws to fix the valve pin in the valve pin retainer (pneumatic and hydraulic drive units)

- The tightening torques given above are only valid for unlubricated screws. All parts must be clean.
- If the screw has been tightened with the correct torque the valve pin in the valve pin retainer has a clearance of 0.02 mm and can be rotated by hand. Jamming of the valve pin must be avoided!

9.5 Tightening torques for drive units

For drive unit (Item number see drawing provided by EWIKON)	For item number (screw-in housing cover)	Thread	Tightening torque Lubricated (high temperature installation paste, see chapter „5.3.1 Tools and operating materials“)	
			M_A [Nm]	M_A [ft·lb]
16720, 19110, 19550	17699	M36x1.5	40	29.5
16818	16800	M42x1.5	45	33.2
17368	17336	M42x1.5	45	33.2
17930 (17933), 17218	17200	M56x1.5	60	44.3
17937, 17258, 19245	17250	M56x1.5	90	66.4
19551, 16700, 19111	19106	M56x1.5	60	44.3
19551-V01	19106-V01	M56x1.5	60	44.3
16740, 19112, 19552	19107	M70x1.5	100	73.8
19250	19251	M72x2.0	120	88.5
19720	19721	M28x1.5	25	18.4
19730, 19783-V01, 19784-V01, 19855, 22710	19731	M36x1.5	35	25.8

For drive unit (Item number see drawing provided by EWIKON)	For item number (screw-in housing cover)	Thread	Tightening torque Lubricated (high temperature installation paste, see chapter „5.3.1 Tools and operating materials“)	
			M_A [Nm]	M_A [ft·lb]
19700, 19705, 19739, 19756, 19757, 19765, 19766, 19780-V01	19701	M42x1.5	35	25.8
19755 (19750), 19710, 19758, 19767, 19781-V01, 19854	19711	M56x1.5	60	44.3
19740	19741	M56x1.5	90	66.4
Bis 01/2013: 19759, 19760, 19768	19761	M72x2.0	110	81.1
Ab 01/2013: 19759, 19760, 19768, 19782-V01	19761	M70x1.5	85	62.7
19785-V01, 19770	19771	M56x1.5	90	66.4

Table 21: Anziehdrehmomente für Antriebe

9.6 Tightening torques for valve pin retainer for electric drive units

Valve pin Ø [mm]	Thread (valve pin retainer)	Tightening torque	
		M_A [Nm]	M_A [ft·lb]
1.2	M10x1	10	7.4
2			
3	M14x1	15	11
4			

Table 22: Tightening torques for valve pin retainer (electric drive units)

- The tightening torques given above are only valid for unlubricated screws. All parts must be clean.
- If the valve pin retainer has been tightened with the correct torque the valve pin in the valve pin retainer has a clearance of 0.02 mm and can be rotated by hand. Jamming of the valve pin must be avoided!

9.7 Tightening torques for valve pin seals

CAUTION

Replacement of valve pin seals

The replacement of valve pin seals may only be carried out from EWIKON trained and specialised staff! Otherwise it may come to leakage during operation and significant material damage.

9.7.1 Tightening torques for one-piece valve pin seals

Valve pin Ø [mm]	Item number	Thread (valve pin retainer)	Tightening torque Thread lubricated (high temperature installation paste, see Chapter 5.3.1, "Tools and operating materials")	
			M_A [Nm]	M_A [ft·lb]
1,5	17235	M6x0.5	3.5	2.6
	19094			

Valve pin Ø [mm]	Item number	Thread (valve pin retainer)	Tightening torque Thread lubricated (high temperature installation paste, see Chapter 5.3.1, "Tools and operating materials")	
			M_A [Nm]	M_A [ft·lb]
1,5	19034	M8x0.75	7	5.2
	19093			
2	16980	M6x0.5	3.5	2.6
	16732			
	16095			
2	17969	M8x0.75	7	5.2
	19096			
3	17350	M8x0.75	7	5.2
	17353			
	16712			
	16929			
	19097			
	19098			
4	16752	M10x1	16	11.8
	17342			
	19099			
	19100			
5	17399	M12x1	25	18.4
6	17425	M16x1	45	33.2
8	17427	M18x1	65	47.9

Table 23: Tightening torques for one-piece valve pin seals

9.7.2 Tightening torques for two-piece valve pin seals

Valve pin Ø [mm]	Sealing element item number	Pressure screw		Tightening torque Thread lubricated (high temperature installation paste, see Chapter 5.3.1, "Tools and operating materials")	
		Item number	Thread	M_A [Nm]	M_A [ft·lb]
1.7	22550-SV01	22570 22571	M9x0.75	5.5	4
	22550-SV02				
	22550-SV03				
	22550-SV04				
2.2	22552-SV01	22570 22571	M9x0.75	5.5	4
	22552-SV02				
	22552-SV03				
	22552-SV04				

Valve pin Ø [mm]	Sealing element item number	Pressure screw		Tightening torque Thread lubricated (high temperature installation paste, see Chapter 5.3.1, "Tools and operating materials")	
		Item number	Thread	M_A [Nm]	M_A [ft·lb]
3.2	22554-SV01	22575 22576	M11x1	8	5.9
	22554-SV02				
	22554-SV03				
	22554-SV04				
4.2	22556-SV01	22580 22581	M13x1	13	9.6
	22556-SV02				
	22556-SV03				
	22556-SV04				
5.2	22558-SV01	22585	M15x1	25	18.5
	22558-SV02				
	22558-SV03				
	22558-SV04				
6.2	22560-SV01	22585	M15x1	23	17
	22560-SV02				
	22560-SV03				
	22560-SV04				

Table 24: Tightening torques for two-piece valve pin seals

EWIKON
Heißkanalsysteme GmbH
Siegener Straße 35
35066 Frankenberg / Germany
Tel: +49 6451 / 501-0
E-Mail: info@ewikon.com
www.ewikon.com

Technical information subject to alteration.

EWIKON